Schema **getdata.xsd**

Elements	Complex types	Simple types
AGENDA	M_CERPANI	AGENDA_ID
	M_MATR	ANO_NE_SMPL
	M_ODB_RYBA	B_TSCON_SMPL
	M_PRETOK	BARVA_SMPL
	M_RYBA_DATA	BREH_50_SMPL
	M_TOXICITA	BREH_HRANA_SMPL
	M_TYP_ODB	BREH_SMER_UPRAVA_SMPL
	M_VALUE	BREH_UPRAVA_SMPL
	M_VALUE_NO_TX	CERPADLO_TYP
	M_VZOREK	DNO_POKRYVNOST_SMPL
	M_VZOREK_BENTOS	DNO_STABILITA_SMPL
	M_VZOREK_DREISSENA	DNO_UPRAVA_NANOS_SMPL
	M_VZOREK_NAROSTY	DNO_UPRAVA_SMPL
	M_VZOREK_PASIV_VZORKOVAC	DNO_VIDITELNOST_SMPL
	M_VZOREK_PLAVENINY	DREVO_SMPL
	M_VZOREK_RYBA	FYTOBENTOS_SMPL
	M_VZOREK_RYBA_PLUDEK	JISTOTA_SMPL
	M_VZOREK_SEDIMENTY	KVET_SMPL
	M_VZOREK_VODA	LAND_USE_SMPL
	M_ZRNITOST	LEDOVY_JEV
	VAL_ITEM	MB_TEREN_SMPL
	VAL_ITEM_FLOAT	MESOHABITAT_SMPL
	VAL_ITEM_NPOSITIVE	OBLACNOST_SMPL
	VAL_ITEM_PROC	ODB_BREH_SMPL
	VAL_SMPL_PINUM	ODB_FOTO_SMPL
	VAL_SMPL_PNUM	ODB_MERENI_SMPL
	VAL_SMPL_PROC	ODB_ZPUSOB_SMPL
		POCASI
		POHLAVI
		PROUD_SMPL
		PROUDENI_SMPL
		PRUHLEDNOST_SMPL
		S_CAS_ANALYZY
		S_LABORATOR
		S_OBJEKT_ID
		S_ODBER_ID
		S_VZOREK_ID
		SMATR_SMPL
		SRAZKY_SMPL
		STAV_SMPL
		SUBSTRAT_SMPL
		TOK_HLOUBKA_SMPL
		TOK_SIRKA_SMPL
		TYP_TOXICITY
		VAL_NUM_POSITIVE
		VAL_PROC
		VEGETACE_SMPL
		VODNOST_SMPL
		ZAHUSTENI_SMPL
		ZAKAL_SMPL
		ZAPACH_SMPL

element **AGENDA**

diagram

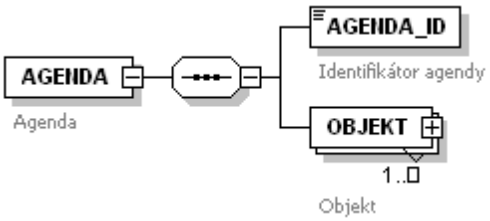

properties
- content complex

children **AGENDA_ID** **OBJEKT**

annotation
- documentation
  Agenda

element **AGENDA/AGENDA_ID**

diagram

type **AGENDA_ID**

properties
- isRef 0
- content simple

facets
- enumeration POV
- enumeration PZV
- enumeration UZ

annotation
- documentation
  Identifikátor agendy

element **AGENDA/OBJEKT**

diagram

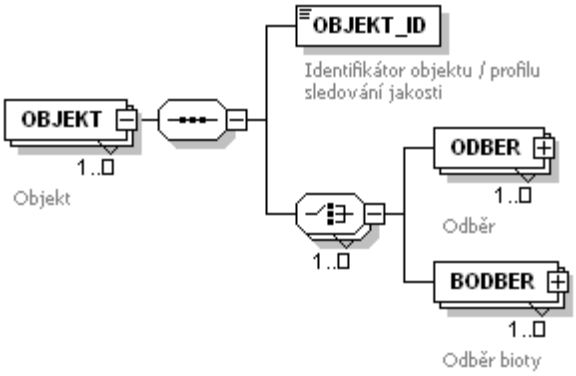

properties
- isRef 0
- minOcc 1
- maxOcc unbounded
- content complex

children **OBJEKT_ID** **ODBER** **BODBER**

annotation
- documentation
  Objekt

element **AGENDA/OBJEKT/OBJEKT_ID**

diagram

type **S_OBJEKT_ID**

properties
- isRef 0
- content simple

facets
- minLength 4
- maxLength 30
- whiteSpace collapse

annotation
documentation
Identifikátor objektu / profilu sledování jakosti

element **AGENDA/OBJEKT/ODBER**

diagram

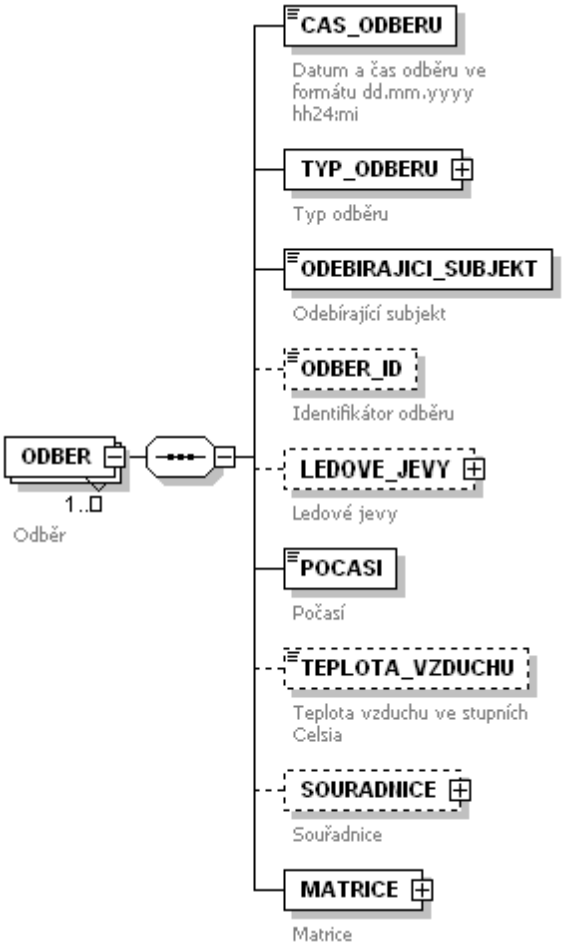

properties
- isRef 0
- minOcc 1
- maxOcc unbounded
- content complex

children **CAS_ODBERU** **TYP_ODBERU** **ODEBIRAJICI_SUBJEKT** **ODBER_ID** **LEDOVE_JEVY** **POCASI** **TEPLOTA_VZDUCHU** **SOURADNICE** **MATRICE**

annotation
documentation
Odběr

element **AGENDA/OBJEKT/ODBER/CAS_ODBERU**

diagram

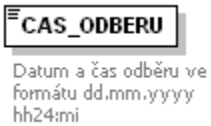

type **xsd:string**

properties
isRef 0
content simple

annotation
documentation
Datum a čas odběru ve formátu dd.mm.yyyy hh24:mi

element **AGENDA/OBJEKT/ODBER/TYP_ODBERU**

diagram

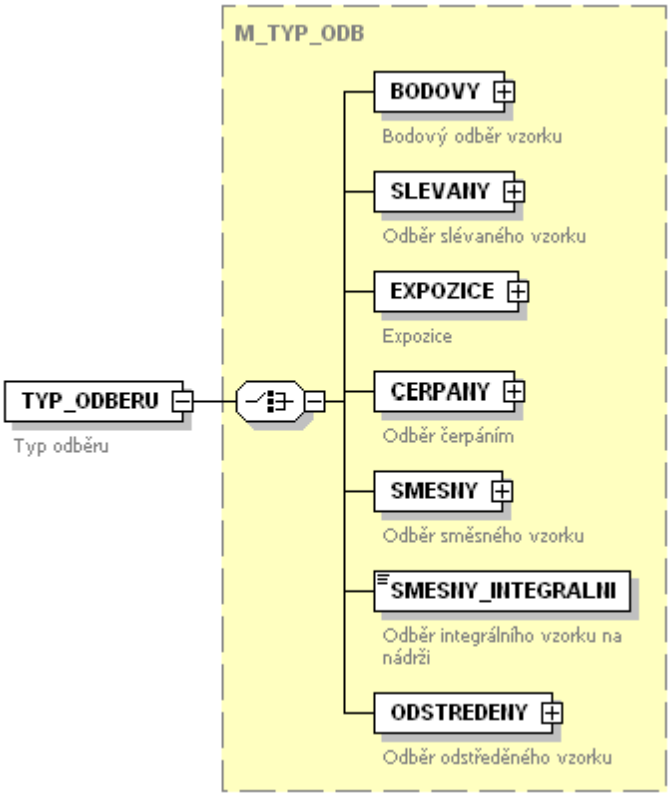

type **M_TYP_ODB**

properties
isRef 0
content complex

children **BODOVY** **SLEVANY** **EXPOZICE** **CERPANY** **SMESNY** **SMESNY_INTEGRALNI** **ODSTREDENY**

annotation
documentation
Typ odběru

element **AGENDA/OBJEKT/ODBER/ODEBIRAJICI_SUBJEKT**

diagram

type **xsd:string**

properties
isRef 0
content simple

annotation
documentation
Odebírající subjekt

element **AGENDA/OBJEKT/ODBER/ODBER_ID**

diagram

type **S_ODBER_ID**

properties

isRef	0
minOcc	0
maxOcc	1
content	simple

annotation

documentation

Identifikátor odběru

element **AGENDA/OBJEKT/ODBER/LEDOVE_JEVY**

diagram

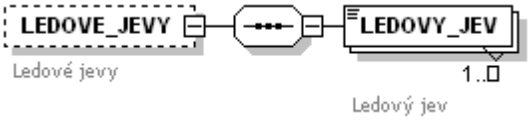

properties

isRef	0
minOcc	0
maxOcc	1
content	complex

children **LEDOVY_JEV**

annotation

documentation

Ledové jevy

element **AGENDA/OBJEKT/ODBER/LEDOVE_JEVY/LEDOVY_JEV**

diagram

type **LEDOVY_JEV**

properties

isRef	0
minOcc	1
maxOcc	unbounded
content	simple

facets

enumeration	OK
enumeration	LEDOVA_TRIST
enumeration	TRIST_LED_BREH
enumeration	LED_BREH
enumeration	ZAMRZ
enumeration	ZACPA
enumeration	CHOD_LEDU
enumeration	VODA_NA_LEDU

annotation

documentation

Ledový jev

element **AGENDA/OBJEKT/ODBER/POCASI**

diagram

type **POCASI**

properties

isRef	0
content	simple

facets

enumeration	OK
enumeration	OBLACNO
enumeration	ZATAZENO
enumeration	MLHA

enumeration MRHOLENI
enumeration DEST
enumeration DEST_SNIH
enumeration SNIH
enumeration PREHANKY
enumeration BOURKA

annotation documentation
Počasí

element **AGENDA/OBJEKT/ODBER/TEPLOTA_VZDUCHU**

diagram

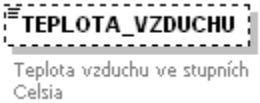

type **xsd:float**

properties
isRef 0
minOcc 0
maxOcc 1
content simple

annotation documentation
Teplota vzduchu ve stupních Celsia

element **AGENDA/OBJEKT/ODBER/SOURADNICE**

diagram

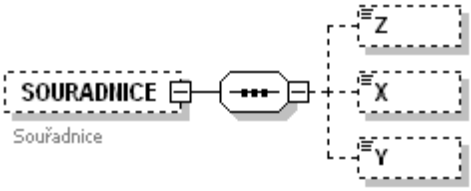

properties
isRef 0
minOcc 0
maxOcc 1
content complex

children **Z** **X** **Y**

annotation documentation
Souřadnice

element **AGENDA/OBJEKT/ODBER/SOURADNICE/Z**

diagram

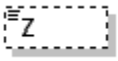

type **xsd:float**

properties
isRef 0
minOcc 0
maxOcc 1
content simple

element **AGENDA/OBJEKT/ODBER/SOURADNICE/X**

diagram

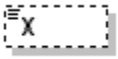

type **xsd:float**

properties
isRef 0
minOcc 0
maxOcc 1
content simple

element **AGENDA/OBJEKT/ODBER/SOURADNICE/Y**

diagram

type **xsd:float**

properties
- isRef 0
- minOcc 0
- maxOcc 1
- content simple

element **AGENDA/OBJEKT/ODBER/MATRICE**

diagram

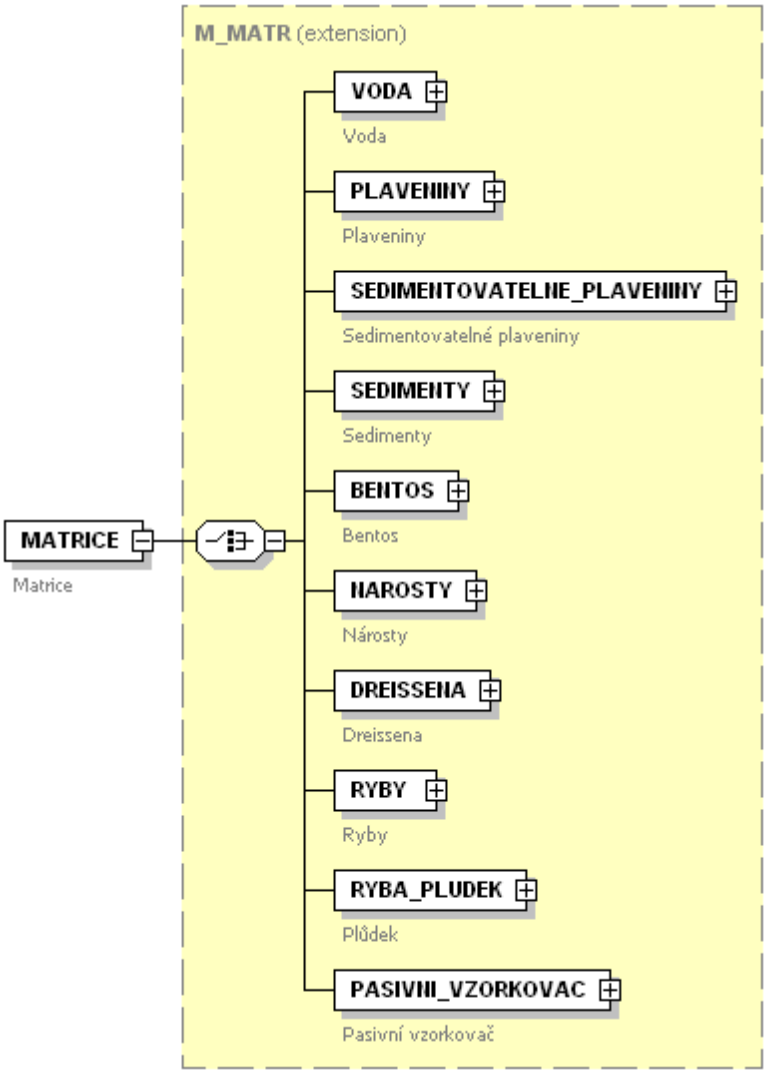

type extension of **M_MATR**

properties
- isRef 0
- content complex

children **VODA** **PLAVENINY** **SEDIMENTOVATELNE_PLAVENINY** **SEDIMENTY** **BENTOS** **NAROSTY** **DREISSENA** **RYBY** **RYBA_PLUDEK** **PASIVNI_VZORKOVAC**

annotation
documentation
Matrice

element **AGENDA/OBJEKT/BODBER**

diagram

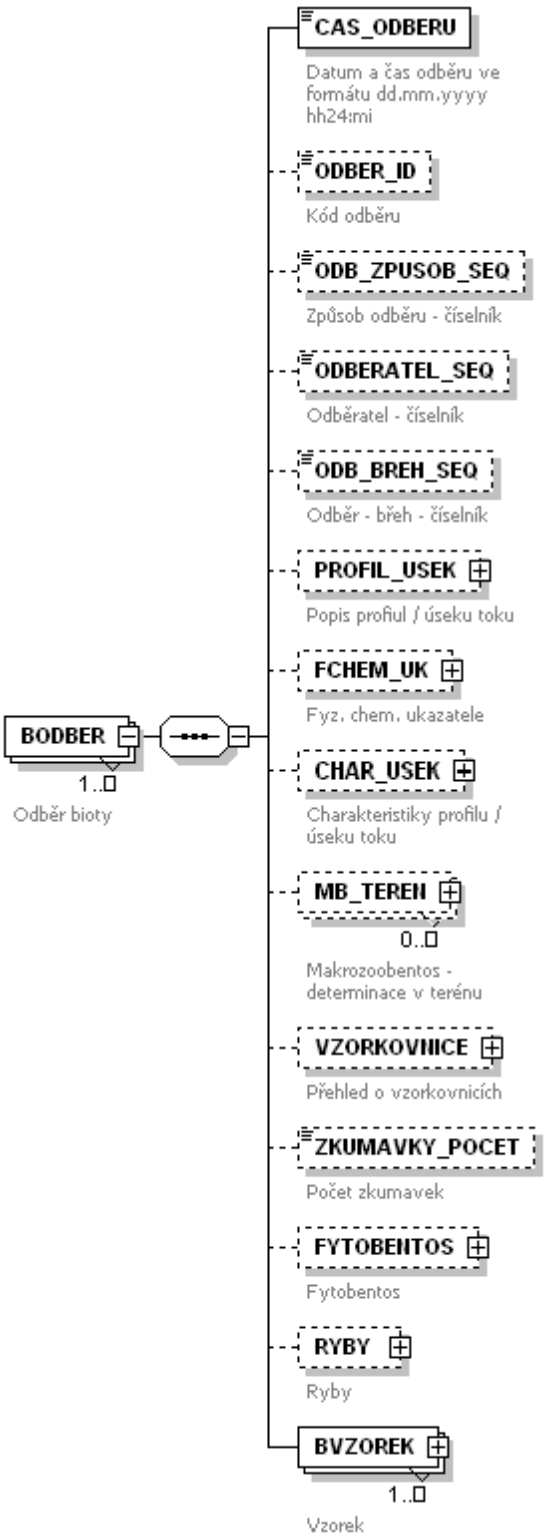

properties

isRef	0
minOcc	1
maxOcc	unbounded
content	complex

children CAS_ODBERU ODBER_ID ODB_ZPUSOB_SEQ ODBERATEL_SEQ ODB_BREH_SEQ PROFIL_USEK FCHEM_UK CHAR_USEK MB_TEREN VZORKOVNICE ZKUMAVKY_POCET FYTOBENTOS RYBY BVZOREK

annotation documentation
Odběr bioty

element **AGENDA/OBJEKT/BODBER/CAS_ODBERU**

diagram

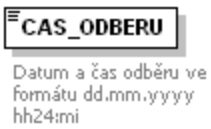

type restriction of **xsd:string**

properties
isRef 0
content simple

facets
length 16
whiteSpace collapse

annotation documentation
Datum a čas odběru ve formátu dd.mm.yyyy hh24:mi

element **AGENDA/OBJEKT/BODBER/ODBER_ID**

diagram

type restriction of **xsd:string**

properties
isRef 0
minOcc 0
maxOcc 1
content simple

facets
maxLength 30
whiteSpace collapse

annotation documentation
Kód odběru

element **AGENDA/OBJEKT/BODBER/ODB_ZPUSOB_SEQ**

diagram

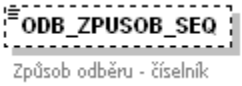

type **ODB_ZPUSOB_SMPL**

properties
isRef 0
minOcc 0
maxOcc 1
content simple

facets
enumeration 1
enumeration 2
enumeration 3

annotation documentation
Způsob odběru - číselník

element **AGENDA/OBJEKT/BODBER/ODBERATEL_SEQ**

diagram

type **xsd:string**

properties
isRef 0
minOcc 0
maxOcc 1
content simple

annotation documentation
Odběratel - číselník

element **AGENDA/OBJEKT/BODBER/ODB_BREH_SEQ**

diagram

type **ODB_BREH_SMPL**

properties

isRef	0
minOcc	0
maxOcc	1
content	simple
nillable	true

facets

enumeration	1
enumeration	2

annotation

documentation

Odběr - břeh - číselník

element **AGENDA/OBJEKT/BODBER/PROFIL_USEK**

diagram

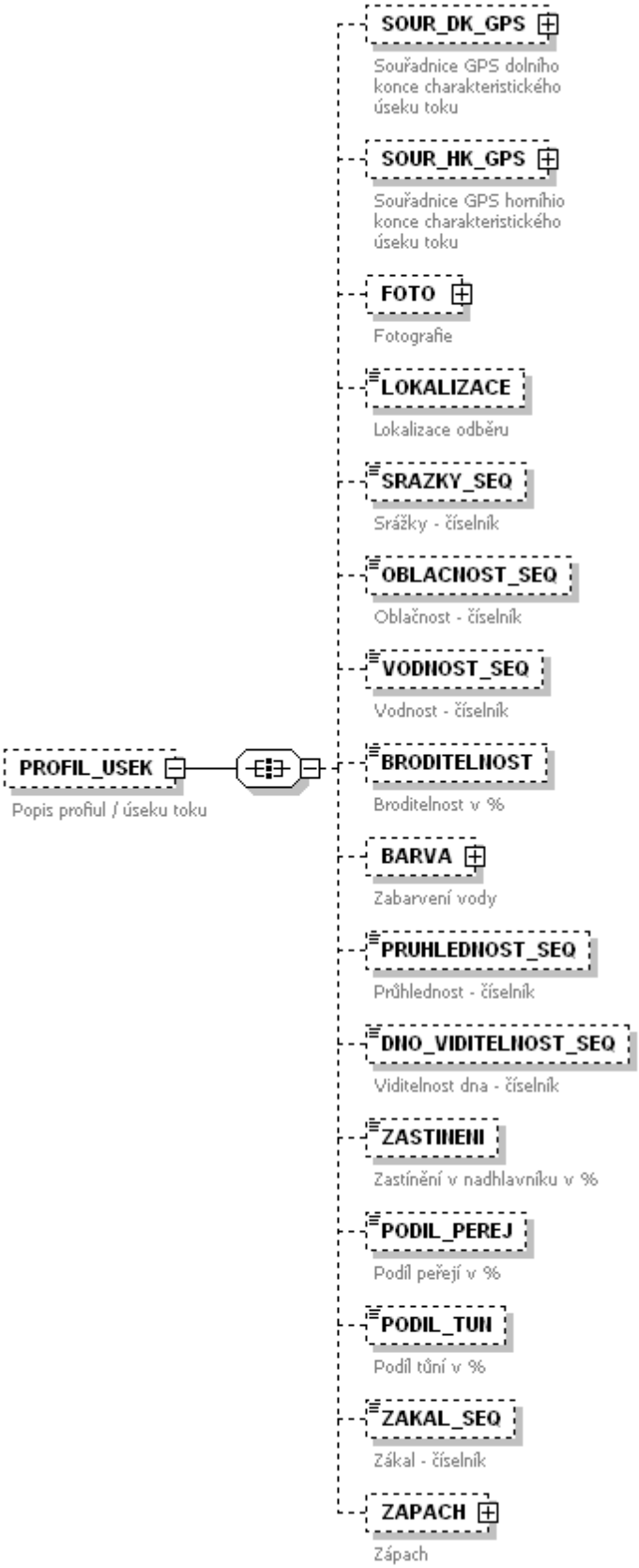

properties

isRef	0
minOcc	0

maxOcc 1
content complex

children SOUR_DK_GPS SOUR_HK_GPS FOTO LOKALIZACE SRAZKY_SEQ OBLACNOST_SEQ VODNOST_SEQ BRODITELNOST BARVA PRUHLEDNOST_SEQ DNO_VIDITELNOST_SEQ ZASTINENI PODIL_PEREJ PODIL_TUN ZAKAL_SEQ ZAPACH

annotation documentation
Popis profiul / úseku toku

element AGENDA/OBJEKT/BODBER/PROFIL_USEK/SOUR_DK_GPS

diagram

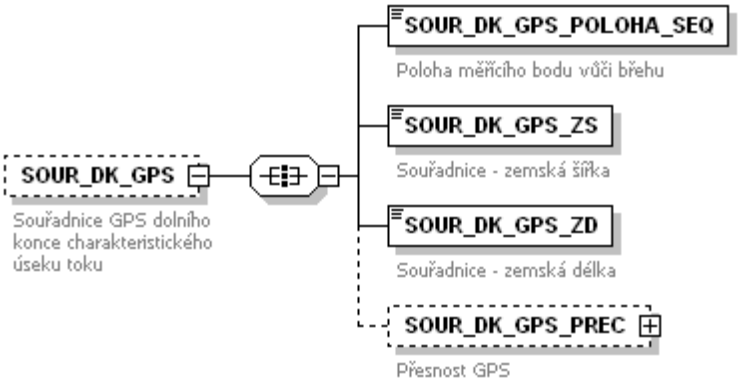

properties isRef 0
minOcc 0
maxOcc 1
content complex

children SOUR_DK_GPS_POLOHA_SEQ SOUR_DK_GPS_ZS SOUR_DK_GPS_ZD SOUR_DK_GPS_PREC

annotation documentation
Souřadnice GPS dolního konce charakteristického úseku toku

element AGENDA/OBJEKT/BODBER/PROFIL_USEK/SOUR_DK_GPS/SOUR_DK_GPS_POLOHA_SEQ

diagram

type ODB_MERENI_SMPL

properties isRef 0
content simple

facets enumeration 1
enumeration 2
enumeration 3

annotation documentation
Poloha měřícího bodu vůči břehu

element AGENDA/OBJEKT/BODBER/PROFIL_USEK/SOUR_DK_GPS/SOUR_DK_GPS_ZS

diagram

type **xsd:string**

properties isRef 0
content simple

annotation documentation
Souřadnice - zemská šířka

element **AGENDA/OBJEKT/BODBER/PROFIL_USEK/SOUR_DK_GPS/SOUR_DK_GPS_ZD**

diagram

type **xsd:string**

properties
- isRef 0
- content simple

annotation
- documentation
  Souřadnice - zemská délka

element **AGENDA/OBJEKT/BODBER/PROFIL_USEK/SOUR_DK_GPS/SOUR_DK_GPS_PREC**

diagram

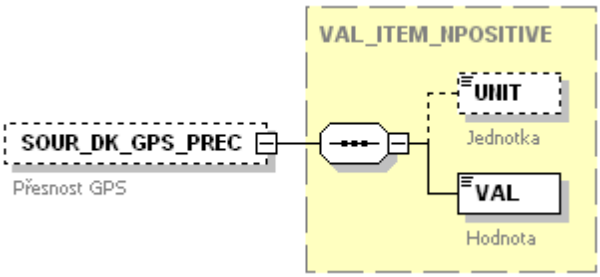

type **VAL_ITEM_NPOSITIVE**

properties
- isRef 0
- minOcc 0
- maxOcc 1
- content complex

children **UNIT** **VAL**

annotation
- documentation
  Přesnost GPS

element **AGENDA/OBJEKT/BODBER/PROFIL_USEK/SOUR_HK_GPS**

diagram

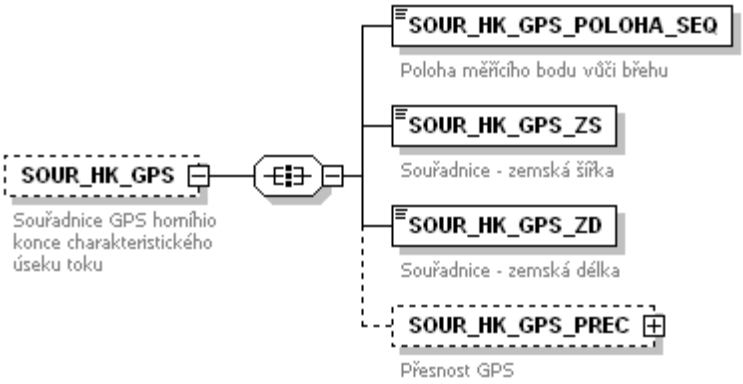

properties
- isRef 0
- minOcc 0
- maxOcc 1
- content complex

children **SOUR_HK_GPS_POLOHA_SEQ** **SOUR_HK_GPS_ZS** **SOUR_HK_GPS_ZD** **SOUR_HK_GPS_PREC**

annotation
- documentation
  Souřadnice GPS horního konce charakteristického úseku toku

element
AGENDA/OBJEKT/BODBER/PROFIL_USEK/SOUR_HK_GPS/SOUR_HK_GPS_POLOHA_SEQ

diagram

type **ODB_MERENI_SMPL**

properties
isRef 0
content simple

facets
enumeration 1
enumeration 2
enumeration 3

annotation
documentation
Poloha měřícího bodu vůči břehu

element **AGENDA/OBJEKT/BODBER/PROFIL_USEK/SOUR_HK_GPS/SOUR_HK_GPS_ZS**

diagram

type **xsd:string**

properties
isRef 0
content simple

annotation
documentation
Souřadnice - zemská šířka

element **AGENDA/OBJEKT/BODBER/PROFIL_USEK/SOUR_HK_GPS/SOUR_HK_GPS_ZD**

diagram

type **xsd:string**

properties
isRef 0
content simple

annotation
documentation
Souřadnice - zemská délka

element **AGENDA/OBJEKT/BODBER/PROFIL_USEK/SOUR_HK_GPS/SOUR_HK_GPS_PREC**

diagram

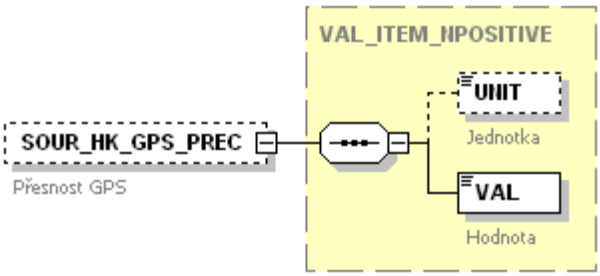

type **VAL_ITEM_NPOSITIVE**

properties
isRef 0
minOcc 0
maxOcc 1
content complex

children **UNIT** **VAL**

annotation
documentation
Přesnost GPS

element **AGENDA/OBJEKT/BODBER/PROFIL_USEK/FOTO**

diagram

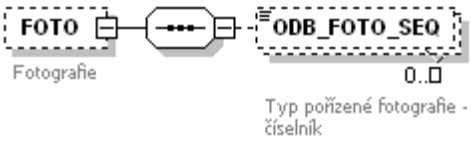

properties
- isRef 0
- minOcc 0
- maxOcc 1
- content complex

children **ODB_FOTO_SEQ**

annotation
documentation
Fotografie

element **AGENDA/OBJEKT/BODBER/PROFIL_USEK/FOTO/ODB_FOTO_SEQ**

diagram

type **ODB_FOTO_SMPL**

properties
- isRef 0
- minOcc 0
- maxOcc unbounded
- content simple

facets
- enumeration 1
- enumeration 2
- enumeration 3

annotation
documentation
Typ pořízené fotografie - číselník

element **AGENDA/OBJEKT/BODBER/PROFIL_USEK/LOKALIZACE**

diagram

type **xsd:string**

properties
- isRef 0
- minOcc 0
- maxOcc 1
- content simple

annotation
documentation
Lokalizace odběru

element **AGENDA/OBJEKT/BODBER/PROFIL_USEK/SRAZKY_SEQ**

diagram

type **SRAZKY_SMPL**

properties
- isRef 0
- minOcc 0
- maxOcc 1
- content simple

facets
- enumeration 1
- enumeration 2
- enumeration 3
- enumeration 4
- enumeration 5

annotation documentation
Srážky - číselník

element **AGENDA/OBJEKT/BODBER/PROFIL_USEK/OBLACNOST_SEQ**

diagram

type **OBLACNOST_SMPL**

properties
isRef 0
minOcc 0
maxOcc 1
content simple

facets
enumeration 1
enumeration 2
enumeration 3
enumeration 4
enumeration 5

annotation documentation
Oblačnost - číselník

element **AGENDA/OBJEKT/BODBER/PROFIL_USEK/VODNOST_SEQ**

diagram

type **VODNOST_SMPL**

properties
isRef 0
minOcc 0
maxOcc 1
content simple

facets
enumeration 1
enumeration 2
enumeration 3
enumeration 4
enumeration 5

annotation documentation
Vodnost - číselník

element **AGENDA/OBJEKT/BODBER/PROFIL_USEK/BRODITELNOST**

diagram

type **VAL_PROC**

properties
isRef 0
minOcc 0
maxOcc 1
content simple

facets
minInclusive 0
maxInclusive 100

annotation documentation
Broditelnost v %

element **AGENDA/OBJEKT/BODBER/PROFIL_USEK/BARVA**

diagram

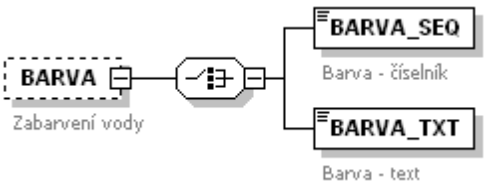

properties
isRef 0
minOcc 0
maxOcc 1
content complex

children **BARVA_SEQ** **BARVA_TXT**

annotation
documentation
Zabarvení vody

element **AGENDA/OBJEKT/BODBER/PROFIL_USEK/BARVA/BARVA_SEQ**

diagram

type **BARVA_SMPL**

properties
isRef 0
content simple

facets
enumeration 1
enumeration 2
enumeration 3
enumeration 4
enumeration 5

annotation
documentation
Barva - číselník

element **AGENDA/OBJEKT/BODBER/PROFIL_USEK/BARVA/BARVA_TXT**

diagram

type **xsd:string**

properties
isRef 0
content simple

annotation
documentation
Barva - text

element **AGENDA/OBJEKT/BODBER/PROFIL_USEK/PRUHLEDNOST_SEQ**

diagram

type **PRUHLEDNOST_SMPL**

properties
isRef 0
minOcc 0
maxOcc 1
content simple

facets
enumeration 1
enumeration 2
enumeration 3

annotation
documentation
Průhlednost - číselník

element **AGENDA/OBJEKT/BODBER/PROFIL_USEK/DNO_VIDITELNOST_SEQ**

diagram

type **DNO_VIDITELNOST_SMPL**

properties
isRef 0
minOcc 0
maxOcc 1
content simple

facets
enumeration 1
enumeration 2
enumeration 3

annotation
documentation
Viditelnost dna - číselník

element **AGENDA/OBJEKT/BODBER/PROFIL_USEK/ZASTINENI**

diagram

type **VAL_PROC**

properties
isRef 0
minOcc 0
maxOcc 1
content simple

facets
minInclusive 0
maxInclusive 100

annotation
documentation
Zastínění v nadhlavníku v %

element **AGENDA/OBJEKT/BODBER/PROFIL_USEK/PODIL_PEREJ**

diagram

type **VAL_PROC**

properties
isRef 0
minOcc 0
maxOcc 1
content simple

facets
minInclusive 0
maxInclusive 100

annotation
documentation
Podíl peřejí v %

element **AGENDA/OBJEKT/BODBER/PROFIL_USEK/PODIL_TUN**

diagram

type **VAL_PROC**

properties
isRef 0
minOcc 0
maxOcc 1
content simple

facets
minInclusive 0
maxInclusive 100

annotation
documentation
Podíl tůní v %

element **AGENDA/OBJEKT/BODBER/PROFIL_USEK/ZAKAL_SEQ**

diagram

type **ZAKAL_SMPL**

properties
isRef 0
minOcc 0
maxOcc 1
content simple

facets
enumeration 1

enumeration 2
enumeration 3
annotation documentation
Zákal - číselník

element **AGENDA/OBJEKT/BODBER/PROFIL_USEK/ZAPACH**

diagram

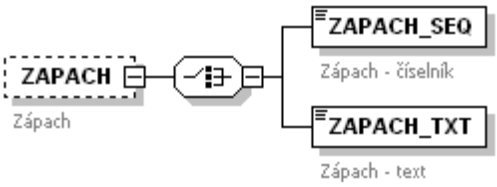

properties
isRef 0
minOcc 0
maxOcc 1
content complex

children **ZAPACH_SEQ** **ZAPACH_TXT**

annotation documentation
Zápach

element **AGENDA/OBJEKT/BODBER/PROFIL_USEK/ZAPACH/ZAPACH_SEQ**

diagram

type **ZAPACH_SMPL**

properties
isRef 0
content simple

facets
enumeration 1
enumeration 2
enumeration 3
enumeration 4
enumeration 5

annotation documentation
Zápach - číselník

element **AGENDA/OBJEKT/BODBER/PROFIL_USEK/ZAPACH/ZAPACH_TXT**

diagram

type **xsd:string**

properties
isRef 0
content simple

annotation documentation
Zápach - text

element **AGENDA/OBJEKT/BODBER/FCHEM_UK**

diagram

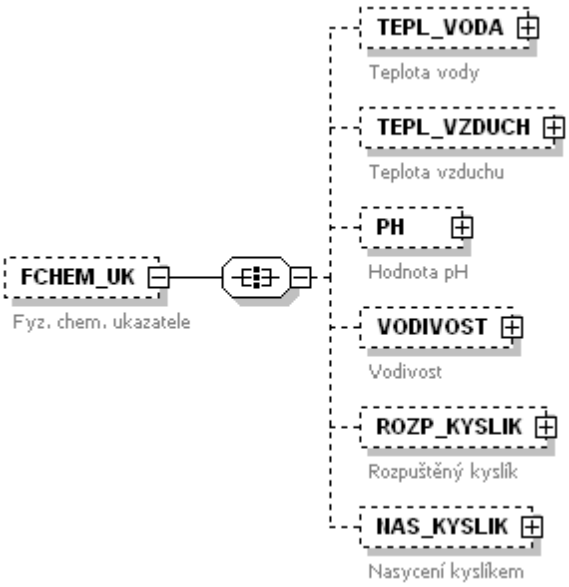

properties
- isRef 0
- minOcc 0
- maxOcc 1
- content complex

children **TEPL_VODA** **TEPL_VZDUCH** **PH** **VODIVOST** **ROZP_KYSLIK** **NAS_KYSLIK**

annotation
documentation
Fyz. chem. ukazatele

element **AGENDA/OBJEKT/BODBER/FCHEM_UK/TEPL_VODA**

diagram

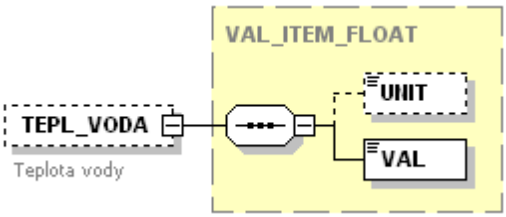

type **VAL_ITEM_FLOAT**

properties
- isRef 0
- minOcc 0
- maxOcc 1
- content complex

children **UNIT** **VAL**

annotation
documentation
Teplota vody

element **AGENDA/OBJEKT/BODBER/FCHEM_UK/TEPL_VZDUCH**

diagram

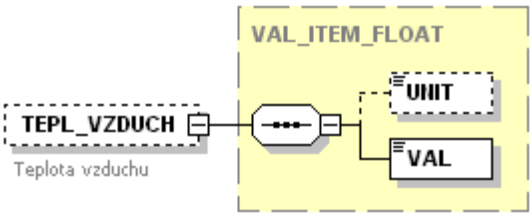

type **VAL_ITEM_FLOAT**

properties
isRef 0
minOcc 0
maxOcc 1
content complex

children **UNIT** **VAL**

annotation
documentation
Teplota vzduchu

element **AGENDA/OBJEKT/BODBER/FCHEM_UK/PH**

diagram

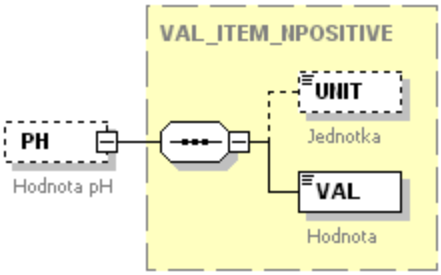

type **VAL_ITEM_NPOSITIVE**

properties
isRef 0
minOcc 0
maxOcc 1
content complex

children **UNIT** **VAL**

annotation
documentation
Hodnota pH

element **AGENDA/OBJEKT/BODBER/FCHEM_UK/VODIVOST**

diagram

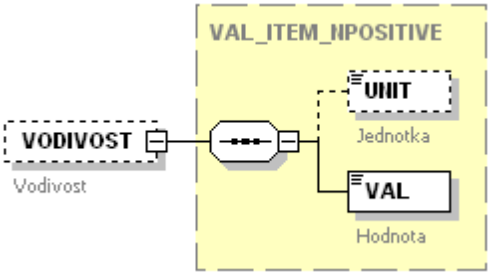

type **VAL_ITEM_NPOSITIVE**

properties
isRef 0
minOcc 0
maxOcc 1
content complex

children **UNIT** **VAL**

annotation
documentation
Vodivost

element **AGENDA/OBJEKT/BODBER/FCHEM_UK/ROZP_KYSLIK**

diagram

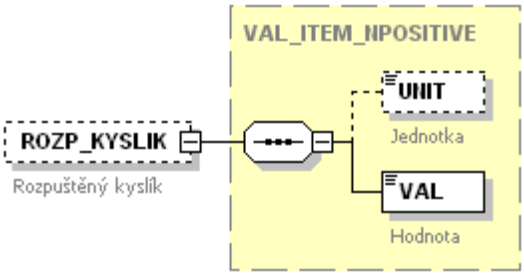

type **VAL_ITEM_NPOSITIVE**

properties
isRef 0
minOcc 0
maxOcc 1
content complex

children **UNIT** **VAL**

annotation
documentation
Rozpuštěný kyslík

element **AGENDA/OBJEKT/BODBER/FCHEM_UK/NAS_KYSLIK**

diagram

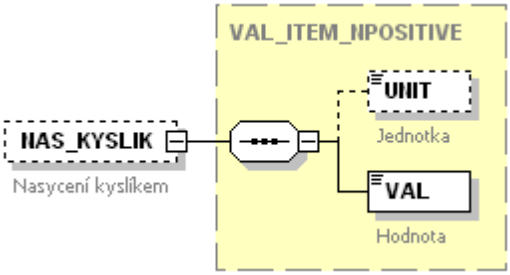

type **VAL_ITEM_NPOSITIVE**

properties
isRef 0
minOcc 0
maxOcc 1
content complex

children **UNIT** **VAL**

annotation
documentation
Nasycení kyslíkem

element **AGENDA/OBJEKT/BODBER/CHAR_USEK**

diagram

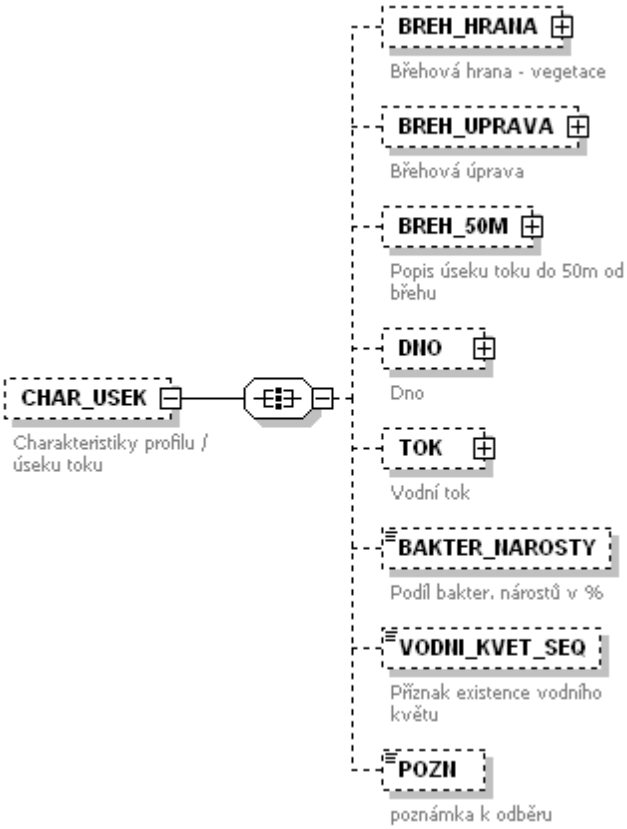

properties
isRef 0

minOcc 0
maxOcc 1
content complex

children **BREH_HRANA** **BREH_UPRAVA** **BREH_50M** **DNO** **TOK** **BAKTER_NAROSTY** **VODNI_KVET_SEQ** **POZN**

annotation
documentation
Charakteristiky profilu / úseku toku

element **AGENDA/OBJEKT/BODBER/CHAR_USEK/BREH_HRANA**

diagram

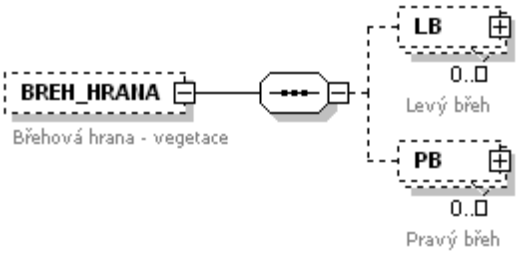

properties
isRef 0
minOcc 0
maxOcc 1
content complex

children **LB** **PB**

annotation
documentation
Břehová hrana - vegetace

element **AGENDA/OBJEKT/BODBER/CHAR_USEK/BREH_HRANA/LB**

diagram

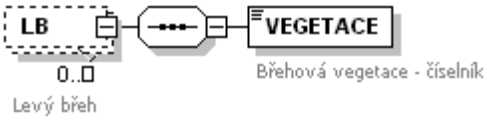

properties
isRef 0
minOcc 0
maxOcc unbounded
content complex

children **VEGETACE**

annotation
documentation
Levý břeh

element **AGENDA/OBJEKT/BODBER/CHAR_USEK/BREH_HRANA/LB/VEGETACE**

diagram

type **BREH_HRANA_SMPL**

properties
isRef 0
content simple

facets
enumeration 1
enumeration 2
enumeration 3
enumeration 4
enumeration 5
enumeration 6
enumeration 7
enumeration 8
enumeration 9
enumeration 10
enumeration 11

annotation
documentation
Břehová vegetace - číselník

element **AGENDA/OBJEKT/BODBER/CHAR_USEK/BREH_HRANA/PB**

diagram

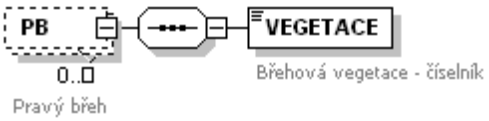

properties

isRef	0
minOcc	0
maxOcc	unbounded
content	complex

children **VEGETACE**

annotation

documentation
Pravý břeh

element **AGENDA/OBJEKT/BODBER/CHAR_USEK/BREH_HRANA/PB/VEGETACE**

diagram

type **BREH_HRANA_SMPL**

properties

isRef	0
content	simple

facets

enumeration	1
enumeration	2
enumeration	3
enumeration	4
enumeration	5
enumeration	6
enumeration	7
enumeration	8
enumeration	9
enumeration	10
enumeration	11

annotation

documentation
Břehová vegetace - číselník

element **AGENDA/OBJEKT/BODBER/CHAR_USEK/BREH_UPRAVA**

diagram

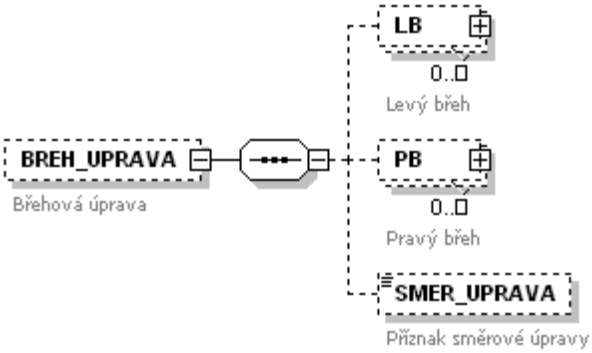

properties

isRef	0
minOcc	0
maxOcc	1
content	complex

children **LB** **PB** **SMER_UPRAVA**

annotation

documentation
Břehová úprava

element **AGENDA/OBJEKT/BODBER/CHAR_USEK/BREH_UPRAVA/LB**

diagram

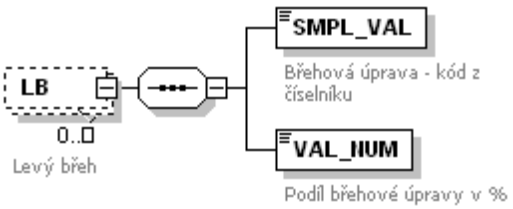

properties
- isRef 0
- minOcc 0
- maxOcc unbounded
- content complex

children **SMPL_VAL** **VAL_NUM**

annotation
documentation
Levý břeh

element **AGENDA/OBJEKT/BODBER/CHAR_USEK/BREH_UPRAVA/LB/SMPL_VAL**

diagram

type **BREH_UPRAVA_SMPL**

properties
- isRef 0
- content simple

facets
- enumeration 1
- enumeration 2
- enumeration 3
- enumeration 4
- enumeration 5
- enumeration 6
- enumeration 7
- enumeration 8
- enumeration 9
- enumeration 10
- enumeration 11
- enumeration 12
- enumeration 13
- enumeration 14

annotation
documentation
Břehová úprava - kód z číselníku

element **AGENDA/OBJEKT/BODBER/CHAR_USEK/BREH_UPRAVA/LB/VAL_NUM**

diagram

type restriction of **VAL_PROC**

properties
- isRef 0
- content simple

facets
- minInclusive 0
- maxInclusive 100

annotation
documentation
Podíl břehové úpravy v %

element **AGENDA/OBJEKT/BODBER/CHAR_USEK/BREH_UPRAVA/PB**

diagram

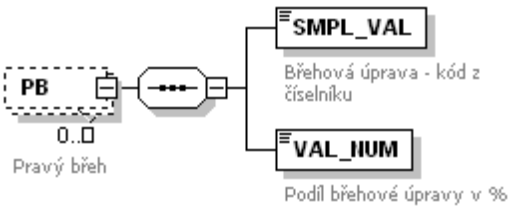

properties
- isRef 0
- minOcc 0
- maxOcc unbounded
- content complex

children **SMPL_VAL** **VAL_NUM**

annotation
documentation
Pravý břeh

element **AGENDA/OBJEKT/BODBER/CHAR_USEK/BREH_UPRAVA/PB/SMPL_VAL**

diagram

type **BREH_UPRAVA_SMPL**

properties
- isRef 0
- content simple

facets
- enumeration 1
- enumeration 2
- enumeration 3
- enumeration 4
- enumeration 5
- enumeration 6
- enumeration 7
- enumeration 8
- enumeration 9
- enumeration 10
- enumeration 11
- enumeration 12
- enumeration 13
- enumeration 14

annotation
documentation
Břehová úprava - kód z číselníku

element **AGENDA/OBJEKT/BODBER/CHAR_USEK/BREH_UPRAVA/PB/VAL_NUM**

diagram

type restriction of **VAL_PROC**

properties
- isRef 0
- content simple

facets
- minInclusive 0
- maxInclusive 100

annotation
documentation
Podíl břehové úpravy v %

element **AGENDA/OBJEKT/BODBER/CHAR_USEK/BREH_UPRAVA/SMER_UPRAVA**

diagram

type **ANO_NE_SMPL**

properties
- isRef 0
- minOcc 0
- maxOcc 1
- content simple

facets
- enumeration 1
- enumeration 0

annotation
documentation
Příznak směrové úpravy

element **AGENDA/OBJEKT/BODBER/CHAR_USEK/BREH_50M**

diagram

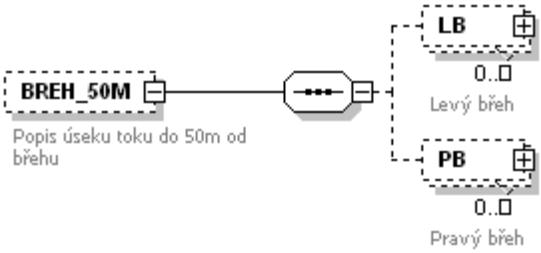

properties
- isRef 0
- minOcc 0
- maxOcc 1
- content complex

children **LB** **PB**

annotation
documentation
Popis úseku toku do 50m od břehu

element **AGENDA/OBJEKT/BODBER/CHAR_USEK/BREH_50M/LB**

diagram

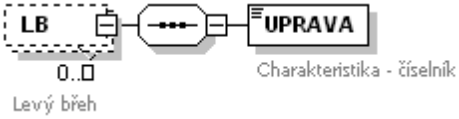

properties
- isRef 0
- minOcc 0
- maxOcc unbounded
- content complex

children **UPRAVA**

annotation
documentation
Levý břeh

element **AGENDA/OBJEKT/BODBER/CHAR_USEK/BREH_50M/LB/UPRAVA**

diagram

type **BREH_50_SMPL**

properties
- isRef 0
- content simple

facets
- enumeration 1
- enumeration 2
- enumeration 3
- enumeration 4
- enumeration 5
- enumeration 6
- enumeration 7
- enumeration 8
- enumeration 9
- enumeration 10
- enumeration 11
- enumeration 12
- enumeration 13

enumeration 14
enumeration 15
enumeration 16
enumeration 17
enumeration 18

annotation documentation
Charakteristika - číselník

element **AGENDA/OBJEKT/BODBER/CHAR_USEK/BREH_50M/PB**

diagram

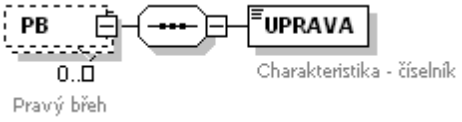

properties
isRef 0
minOcc 0
maxOcc unbounded
content complex

children **UPRAVA**

annotation documentation
Pravý břeh

element **AGENDA/OBJEKT/BODBER/CHAR_USEK/BREH_50M/PB/UPRAVA**

diagram

type **BREH_50_SMPL**

properties
isRef 0
content simple

facets
enumeration 1
enumeration 2
enumeration 3
enumeration 4
enumeration 5
enumeration 6
enumeration 7
enumeration 8
enumeration 9
enumeration 10
enumeration 11
enumeration 12
enumeration 13
enumeration 14
enumeration 15
enumeration 16
enumeration 17
enumeration 18

annotation documentation
Charakteristika - číselník

element **AGENDA/OBJEKT/BODBER/CHAR_USEK/DNO**

diagram

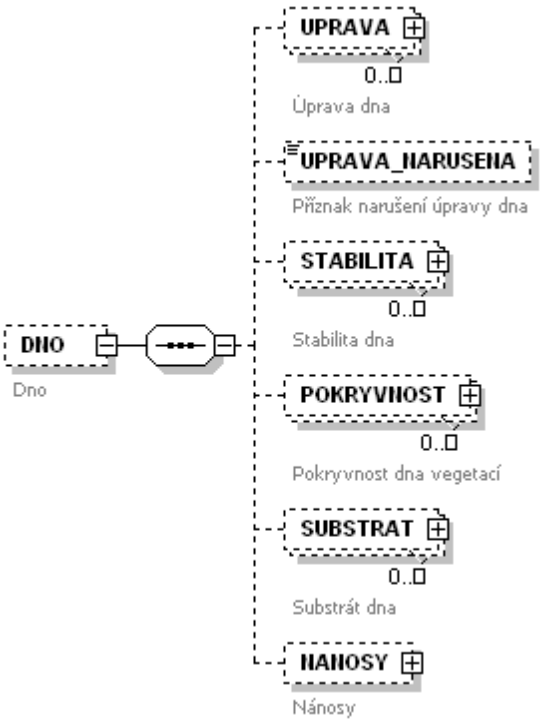

properties
- isRef 0
- minOcc 0
- maxOcc 1
- content complex

children **UPRAVA** **UPRAVA_NARUSENA** **STABILITA** **POKRYVNOST** **SUBSTRAT** **NANOSY**

annotation
documentation
Dno

element **AGENDA/OBJEKT/BODBER/CHAR_USEK/DNO/UPRAVA**

diagram

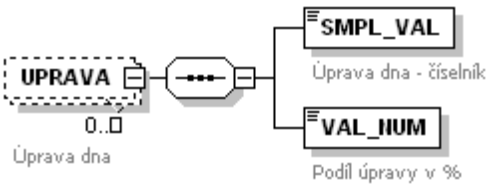

properties
- isRef 0
- minOcc 0
- maxOcc unbounded
- content complex

children **SMPL_VAL** **VAL_NUM**

annotation
documentation
Úprava dna

element **AGENDA/OBJEKT/BODBER/CHAR_USEK/DNO/UPRAVA/SMPL_VAL**

diagram

type **DNO_UPRAVA_SMPL**

properties
- isRef 0
- content simple

facets
enumeration 1
enumeration 2
enumeration 3
enumeration 4
enumeration 5
enumeration 6
enumeration 7

annotation
documentation
Úprava dna - číselník

element AGENDA/OBJEKT/BODBER/CHAR_USEK/DNO/UPRAVA/VAL_NUM

diagram

type restriction of **VAL_PROC**

properties
isRef 0
content simple

facets
minInclusive 0
maxInclusive 100

annotation
documentation
Podíl úpravy v %

element AGENDA/OBJEKT/BODBER/CHAR_USEK/DNO/UPRAVA_NARUSENA

diagram

type **ANO_NE_SMPL**

properties
isRef 0
minOcc 0
maxOcc 1
content simple

facets
enumeration 1
enumeration 0

annotation
documentation
Příznak narušení úpravy dna

element AGENDA/OBJEKT/BODBER/CHAR_USEK/DNO/STABILITA

diagram

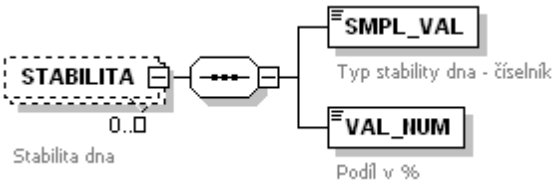

properties
isRef 0
minOcc 0
maxOcc unbounded
content complex

children **SMPL_VAL** **VAL_NUM**

annotation
documentation
Stabilita dna

element AGENDA/OBJEKT/BODBER/CHAR_USEK/DNO/STABILITA/SMPL_VAL

diagram

type **DNO_STABILITA_SMPL**

properties
isRef 0

facets
content simple
enumeration 1
enumeration 2
enumeration 3
enumeration 4

annotation
documentation
Typ stability dna - číselník

element AGENDA/OBJEKT/BODBER/CHAR_USEK/DNO/STABILITA/VAL_NUM

diagram

type restriction of **VAL_PROC**

properties
isRef 0
content simple

facets
minInclusive 0
maxInclusive 100

annotation
documentation
Podíl v %

element AGENDA/OBJEKT/BODBER/CHAR_USEK/DNO/POKRYVNOST

diagram

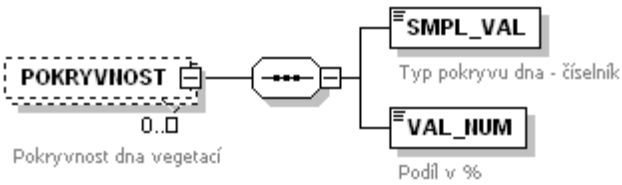

properties
isRef 0
minOcc 0
maxOcc unbounded
content complex

children **SMPL_VAL** **VAL_NUM**

annotation
documentation
Pokryvnost dna vegetací

element AGENDA/OBJEKT/BODBER/CHAR_USEK/DNO/POKRYVNOST/SMPL_VAL

diagram

type **DNO_POKRYVNOST_SMPL**

properties
isRef 0
content simple

facets
enumeration 1
enumeration 2
enumeration 3

annotation
documentation
Typ pokryvu dna - číselník

element AGENDA/OBJEKT/BODBER/CHAR_USEK/DNO/POKRYVNOST/VAL_NUM

diagram

type restriction of **VAL_PROC**

properties
isRef 0
content simple

facets
minInclusive 0
maxInclusive 100

annotation documentation
Podíl v %

element **AGENDA/OBJEKT/BODBER/CHAR_USEK/DNO/SUBSTRAT**

diagram

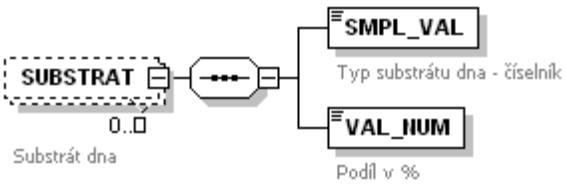

properties
isRef 0
minOcc 0
maxOcc unbounded
content complex

children **SMPL_VAL** **VAL_NUM**

annotation documentation
Substrát dna

element **AGENDA/OBJEKT/BODBER/CHAR_USEK/DNO/SUBSTRAT/SMPL_VAL**

diagram

type **SUBSTRAT_SMPL**

properties
isRef 0
content simple

facets
enumeration 1
enumeration 2
enumeration 3
enumeration 4
enumeration 5
enumeration 6
enumeration 7
enumeration 8
enumeration 9

annotation documentation
Typ substrátu dna - číselník

element **AGENDA/OBJEKT/BODBER/CHAR_USEK/DNO/SUBSTRAT/VAL_NUM**

diagram

type restriction of **VAL_PROC**

properties
isRef 0
content simple

facets
minInclusive 0
maxInclusive 100

annotation documentation
Podíl v %

element **AGENDA/OBJEKT/BODBER/CHAR_USEK/DNO/NANOSY**

diagram

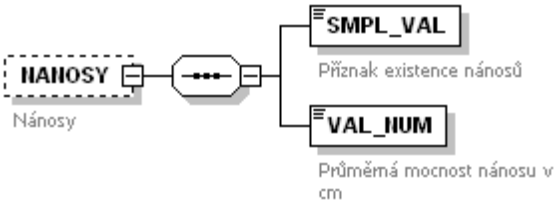

properties
isRef 0
minOcc 0
maxOcc 1
content complex

children **SMPL_VAL** **VAL_NUM**

annotation
documentation
Nánosy

element **AGENDA/OBJEKT/BODBER/CHAR_USEK/DNO/NANOSY/SMPL_VAL**

diagram

type **ANO_NE_SMPL**

properties
isRef 0
content simple

facets
enumeration 1
enumeration 0

annotation
documentation
Příznak existence nánosů

element **AGENDA/OBJEKT/BODBER/CHAR_USEK/DNO/NANOSY/VAL_NUM**

diagram

type restriction of **VAL_NUM_POSITIVE**

properties
isRef 0
content simple

facets
minInclusive 0

annotation
documentation
Průměrná mocnost nánosu v cm

element **AGENDA/OBJEKT/BODBER/CHAR_USEK/TOK**

diagram

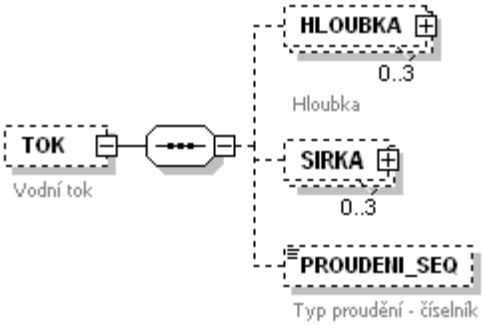

properties
isRef 0
minOcc 0
maxOcc 1
content complex

children **HLOUBKA** **SIRKA** **PROUDENI_SEQ**

annotation
documentation
Vodní tok

element **AGENDA/OBJEKT/BODBER/CHAR_USEK/TOK/HLOUBKA**

diagram

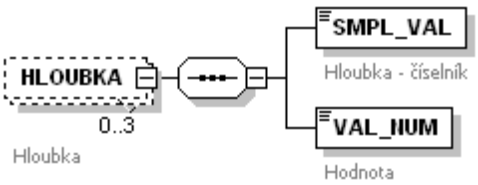

properties
- isRef 0
- minOcc 0
- maxOcc 3
- content complex

children **SMPL_VAL** **VAL_NUM**

annotation
documentation
Hloubka

element **AGENDA/OBJEKT/BODBER/CHAR_USEK/TOK/HLOUBKA/SMPL_VAL**

diagram

type **TOK_HLOUBKA_SMPL**

properties
- isRef 0
- content simple

facets
- enumeration 1
- enumeration 2
- enumeration 3

annotation
documentation
Hloubka - číselník

element **AGENDA/OBJEKT/BODBER/CHAR_USEK/TOK/HLOUBKA/VAL_NUM**

diagram

type restriction of **VAL_NUM_POSITIVE**

properties
- isRef 0
- content simple

facets
- minInclusive 0

annotation
documentation
Hodnota

element **AGENDA/OBJEKT/BODBER/CHAR_USEK/TOK/SIRKA**

diagram

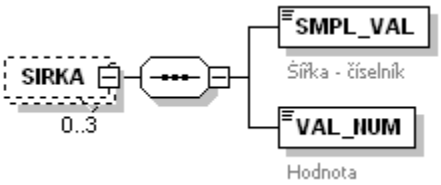

properties
- isRef 0
- minOcc 0
- maxOcc 3
- content complex

children **SMPL_VAL** **VAL_NUM**

element **AGENDA/OBJEKT/BODBER/CHAR_USEK/TOK/SIRKA/SMPL_VAL**

diagram

type **TOK_SIRKA_SMPL**

properties
- isRef 0
- content simple

facets
- enumeration 1
- enumeration 2
- enumeration 3

annotation
documentation
Šířka - číselník

element **AGENDA/OBJEKT/BODBER/CHAR_USEK/TOK/SIRKA/VAL_NUM**

diagram

type restriction of **VAL_NUM_POSITIVE**

properties
- isRef 0
- content simple

facets
- minInclusive 0

annotation
documentation
Hodnota

element **AGENDA/OBJEKT/BODBER/CHAR_USEK/TOK/PROUDENI_SEQ**

diagram

type **PROUDENI_SMPL**

properties
- isRef 0
- minOcc 0
- maxOcc 1
- content simple

facets
- enumeration 1
- enumeration 2
- enumeration 3
- enumeration 4

annotation
documentation
Typ proudění - číselník

element **AGENDA/OBJEKT/BODBER/CHAR_USEK/BAKTER_NAROSTY**

diagram

type **VAL_PROC**

properties
- isRef 0
- minOcc 0
- maxOcc 1
- content simple

facets
- minInclusive 0
- maxInclusive 100

annotation
documentation
Podíl bakter. nárostů v %

element **AGENDA/OBJEKT/BODBER/CHAR_USEK/VODNI_KVET_SEQ**

diagram

type **ANO_NE_SMPL**

properties
- isRef 0
- minOcc 0
- maxOcc 1
- content simple

facets
- enumeration 1
- enumeration 0

annotation
documentation
Příznak existence vodního květu

element **AGENDA/OBJEKT/BODBER/CHAR_USEK/POZN**

diagram

type **xsd:string**

properties
- isRef 0
- minOcc 0
- maxOcc 1
- content simple

annotation
documentation
poznámka k odběru

element **AGENDA/OBJEKT/BODBER/MB_TEREN**

diagram

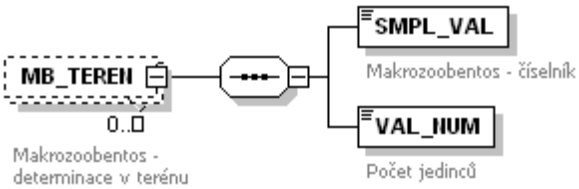

properties
- isRef 0
- minOcc 0
- maxOcc unbounded
- content complex

children **SMPL_VAL** **VAL_NUM**

annotation
documentation
Makrozoobentos - determinace v terénu

element **AGENDA/OBJEKT/BODBER/MB_TEREN/SMPL_VAL**

diagram

type **MB_TEREN_SMPL**

properties
- isRef 0
- content simple

facets
- enumeration 1
- enumeration 2
- enumeration 3
- enumeration 4
- enumeration 5
- enumeration 6
- enumeration 7

enumeration 8
enumeration 9
enumeration 10
enumeration 11
enumeration 12
enumeration 13
enumeration 14
enumeration 15
enumeration 16

annotation
documentation
Makrozoobentos - číselník

element **AGENDA/OBJEKT/BODBER/MB_TEREN/VAL_NUM**

diagram

type restriction of **xsd:positiveInteger**

properties
isRef 0
content simple

annotation
documentation
Počet jedinců

element **AGENDA/OBJEKT/BODBER/VZORKOVNICE**

diagram

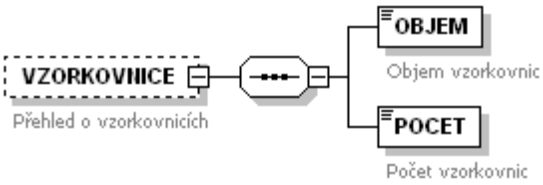

properties
isRef 0
minOcc 0
maxOcc 1
content complex

children **OBJEM** **POCET**

annotation
documentation
Přehled o vzorkovnicích

element **AGENDA/OBJEKT/BODBER/VZORKOVNICE/OBJEM**

diagram

type **VAL_NUM_POSITIVE**

properties
isRef 0
content simple

facets
minInclusive 0

annotation
documentation
Objem vzorkovnic

element **AGENDA/OBJEKT/BODBER/VZORKOVNICE/POCET**

diagram

type **xsd:positiveInteger**

properties
isRef 0
content simple

annotation
documentation
Počet vzorkovnic

element **AGENDA/OBJEKT/BODBER/ZKUMAVKY_POCET**

diagram

type **xsd:positiveInteger**

properties
- isRef 0
- minOcc 0
- maxOcc 1
- content simple

annotation
documentation
Počet zkumavek

element **AGENDA/OBJEKT/BODBER/FYTOBENTOS**

diagram

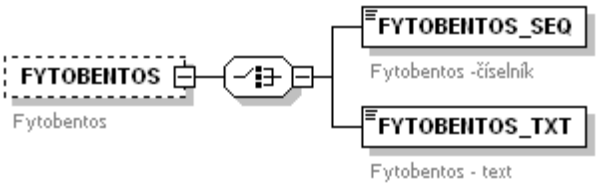

properties
- isRef 0
- minOcc 0
- maxOcc 1
- content complex

children **FYTOBENTOS_SEQ** **FYTOBENTOS_TXT**

annotation
documentation
Fytobentos

element **AGENDA/OBJEKT/BODBER/FYTOBENTOS/FYTOBENTOS_SEQ**

diagram

type **FYTOBENTOS_SMPL**

properties
- isRef 0
- content simple

facets
- enumeration 1
- enumeration 2
- enumeration 3
- enumeration 4

annotation
documentation
Fytobentos -číselník

element **AGENDA/OBJEKT/BODBER/FYTOBENTOS/FYTOBENTOS_TXT**

diagram

type **xsd:string**

properties
- isRef 0
- content simple

annotation
documentation
Fytobentos - text

element **AGENDA/OBJEKT/BODBER/RYBY**

diagram

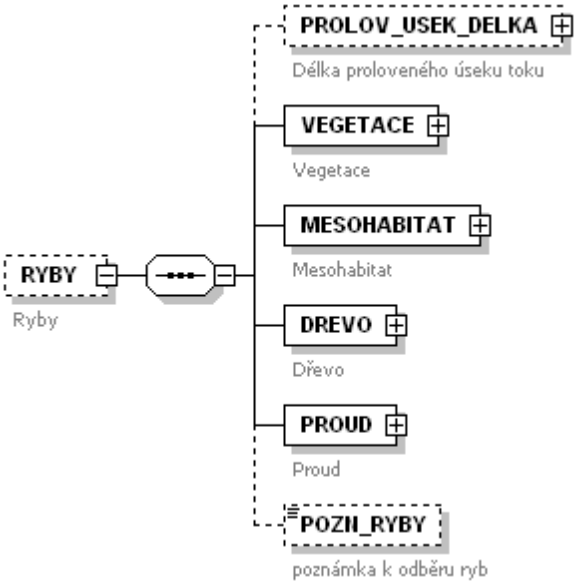

properties
- isRef 0
- minOcc 0
- maxOcc 1
- content complex

children **PROLOV_USEK_DELKA** **VEGETACE** **MESOHABITAT** **DREVO** **PROUD** **POZN_RYBY**

annotation
documentation
Ryby

element **AGENDA/OBJEKT/BODBER/RYBY/PROLOV_USEK_DELKA**

diagram

properties
- isRef 0
- minOcc 0
- maxOcc 1
- content complex

children **UNIT** **VAL**

annotation
documentation
Délka proloveného úseku toku

element **AGENDA/OBJEKT/BODBER/RYBY/PROLOV_USEK_DELKA/UNIT**

diagram

type **xsd:string**

properties
- isRef 0
- content simple
- default m
- nillable false

annotation
documentation
Jednotka

element **AGENDA/OBJEKT/BODBER/RYBY/PROLOV_USEK_DELKA/VAL**

diagram

type **xsd:float**

properties
isRef 0
content simple

annotation
documentation
Hodnota

element **AGENDA/OBJEKT/BODBER/RYBY/VEGETACE**

diagram

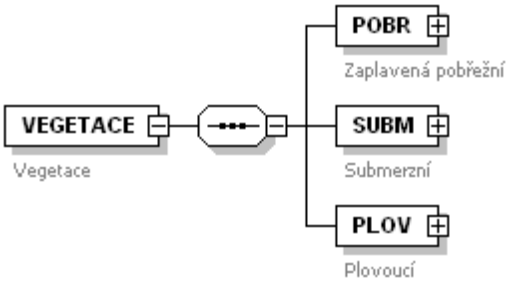

properties
isRef 0
content complex

children **POBR** **SUBM** **PLOV**

annotation
documentation
Vegetace

element **AGENDA/OBJEKT/BODBER/RYBY/VEGETACE/POBR**

diagram

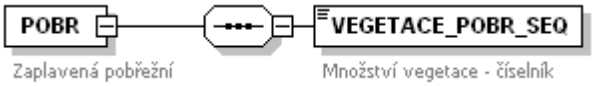

properties
isRef 0
content complex

children **VEGETACE_POBR_SEQ**

annotation
documentation
Zaplavená pobřežní

element **AGENDA/OBJEKT/BODBER/RYBY/VEGETACE/POBR/VEGETACE_POBR_SEQ**

diagram

type **VEGETACE_SMPL**

properties
isRef 0
content simple

facets
enumeration 1
enumeration 2
enumeration 3

annotation
documentation
Množství vegetace - číselník

element **AGENDA/OBJEKT/BODBER/RYBY/VEGETACE/SUBM**

diagram

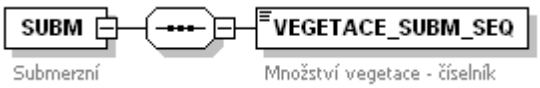

properties
isRef 0
content complex

children **VEGETACE_SUBM_SEQ**

annotation
documentation
Submerzní

element **AGENDA/OBJEKT/BODBER/RYBY/VEGETACE/SUBM/VEGETACE_SUBM_SEQ**

diagram

type **VEGETACE_SMPL**

properties
isRef 0
content simple

facets
enumeration 1
enumeration 2
enumeration 3

annotation
documentation
Množství vegetace - číselník

element **AGENDA/OBJEKT/BODBER/RYBY/VEGETACE/PLOV**

diagram

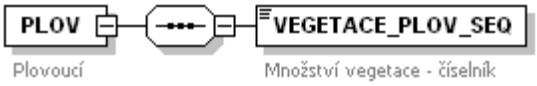

properties
isRef 0
content complex

children **VEGETACE_PLOV_SEQ**

annotation
documentation
Plovoucí

element **AGENDA/OBJEKT/BODBER/RYBY/VEGETACE/PLOV/VEGETACE_PLOV_SEQ**

diagram

type **VEGETACE_SMPL**

properties
isRef 0
content simple

facets
enumeration 1
enumeration 2
enumeration 3

annotation
documentation
Množství vegetace - číselník

element **AGENDA/OBJEKT/BODBER/RYBY/MESOHABITAT**

diagram

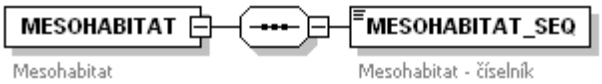

properties
isRef 0
content complex

children **MESOHABITAT_SEQ**

annotation documentation
Mesohabitat

element **AGENDA/OBJEKT/BODBER/RYBY/MESOHABITAT/MESOHABITAT_SEQ**

diagram

type **MESOHABITAT_SMPL**

properties
isRef 0
content simple

facets
enumeration 1
enumeration 2
enumeration 3
enumeration 4
enumeration 5

annotation documentation
Mesohabitat - číselník

element **AGENDA/OBJEKT/BODBER/RYBY/DREVO**

diagram

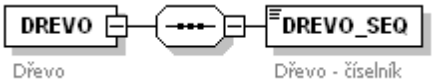

properties
isRef 0
content complex

children **DREVO_SEQ**

annotation documentation
Dřevo

element **AGENDA/OBJEKT/BODBER/RYBY/DREVO/DREVO_SEQ**

diagram

type **MESOHABITAT_SMPL**

properties
isRef 0
content simple

facets
enumeration 1
enumeration 2
enumeration 3
enumeration 4
enumeration 5

annotation documentation
Dřevo - číselník

element **AGENDA/OBJEKT/BODBER/RYBY/PROUD**

diagram

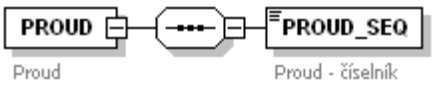

properties
isRef 0
content complex

children **PROUD_SEQ**

annotation documentation
Proud

element **AGENDA/OBJEKT/BODBER/RYBY/PROUD/PROUD_SEQ**

diagram

type **MESOHABITAT_SMPL**

properties
isRef 0
content simple

facets
enumeration 1
enumeration 2
enumeration 3
enumeration 4
enumeration 5

annotation
documentation
Proud - číselník

element **AGENDA/OBJEKT/BODBER/RYBY/POZN_RYBY**

diagram

type **xsd:string**

properties
isRef 0
minOcc 0
maxOcc 1
content simple

annotation
documentation
poznámka k odběru ryb

element **AGENDA/OBJEKT/BODBER/BVZOREK**

diagram

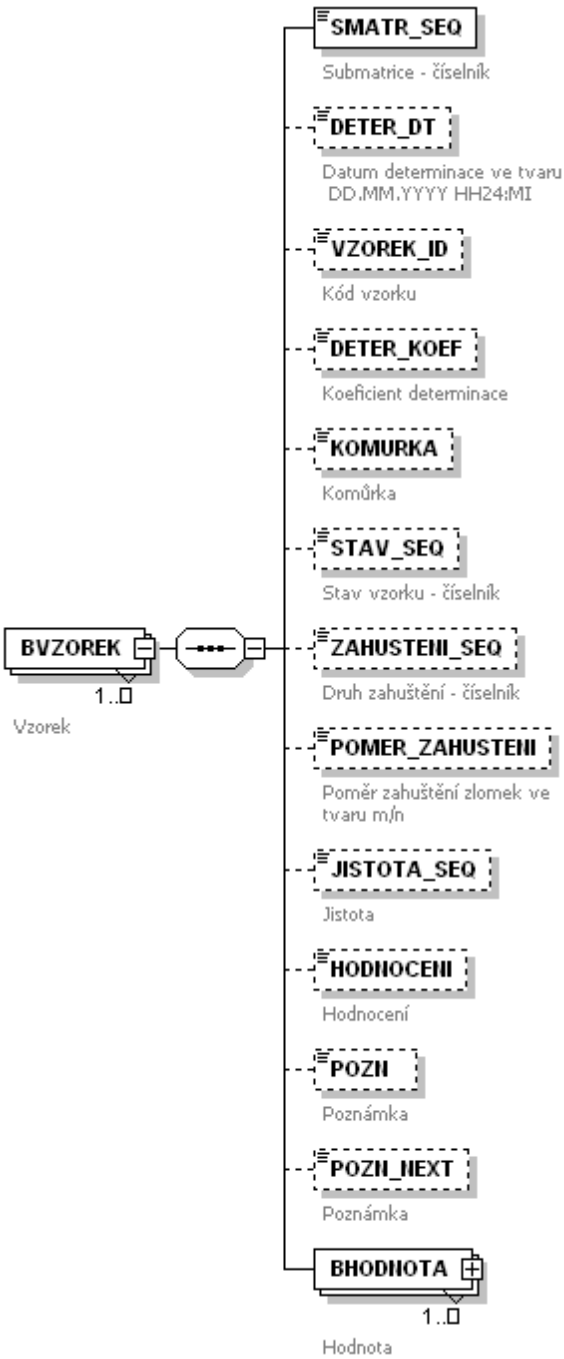

properties

isRef	0
minOcc	1
maxOcc	unbounded
content	complex

children **SMATR_SEQ** **DETER_DT** **VZOREK_ID** **DETER_KOEF** **KOMURKA** **STAV_SEQ** **ZAHUSTENI_SEQ** **POMER_ZAHUSTENI** **JISTOTA_SEQ** **HODNOCENI** **POZN** **POZN_NEXT** **BHODNOTA**

annotation

documentation

Vzorek

element **AGENDA/OBJEKT/BODBER/BVZOREK/SMATR_SEQ**

diagram

type **SMATR_SMPL**

properties
- isRef 0
- content simple

facets
- enumeration FB
- enumeration MF
- enumeration FP
- enumeration MB
- enumeration RYBY

annotation
- documentation

Submatrice - číselník

element **AGENDA/OBJEKT/BODBER/BVZOREK/DETER_DT**

diagram

type **xsd:string**

properties
- isRef 0
- minOcc 0
- maxOcc 1
- content simple

annotation
- documentation

Datum determinace ve tvaru DD.MM.YYYY HH24:MI

element **AGENDA/OBJEKT/BODBER/BVZOREK/VZOREK_ID**

diagram

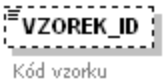

type **xsd:string**

properties
- isRef 0
- minOcc 0
- maxOcc 1
- content simple

annotation
- documentation

Kód vzorku

element **AGENDA/OBJEKT/BODBER/BVZOREK/DETER_KOEF**

diagram

type restriction of **xsd:positiveInteger**

properties
- isRef 0
- minOcc 0
- maxOcc 1
- content simple

facets
- minInclusive 1
- maxInclusive 10

annotation
- documentation

Koeficient determinace

element **AGENDA/OBJEKT/BODBER/BVZOREK/KOMURKA**

diagram

type **xsd:string**

properties
- isRef 0
- minOcc 0
- maxOcc 1
- content simple

annotation
documentation
Komůrka

element **AGENDA/OBJEKT/BODBER/BVZOREK/STAV_SEQ**

diagram

type **STAV_SMPL**

properties
- isRef 0
- minOcc 0
- maxOcc 1
- content simple

facets
- enumeration 1
- enumeration 2
- enumeration 3

annotation
documentation
Stav vzorku - číselník

element **AGENDA/OBJEKT/BODBER/BVZOREK/ZAHUSTENI_SEQ**

diagram

type **ZAHUSTENI_SMPL**

properties
- isRef 0
- minOcc 0
- maxOcc 1
- content simple

facets
- enumeration 1
- enumeration 2
- enumeration 3
- enumeration 3

annotation
documentation
Druh zahuštění - číselník

element **AGENDA/OBJEKT/BODBER/BVZOREK/POMER_ZAHUSTENI**

diagram

type **xsd:string**

properties
- isRef 0
- minOcc 0
- maxOcc 1
- content simple

annotation
documentation
Poměr zahuštění zlomek ve tvaru m/n

element **AGENDA/OBJEKT/BODBER/BVZOREK/JISTOTA_SEQ**

diagram

type **JISTOTA_SMPL**

properties
- isRef 0
- minOcc 0
- maxOcc 1
- content simple

facets
- enumeration 1
- enumeration 2
- enumeration 3

annotation
documentation
Jistota

element **AGENDA/OBJEKT/BODBER/BVZOREK/HODNOCENI**

diagram

type **xsd:string**

properties
- isRef 0
- minOcc 0
- maxOcc 1
- content simple

annotation
documentation
Hodnocení

element **AGENDA/OBJEKT/BODBER/BVZOREK/POZN**

diagram

type **xsd:string**

properties
- isRef 0
- minOcc 0
- maxOcc 1
- content simple

annotation
documentation
Poznámka

element **AGENDA/OBJEKT/BODBER/BVZOREK/POZN_NEXT**

diagram

type **xsd:string**

properties
- isRef 0
- minOcc 0
- maxOcc 1
- content simple

annotation
documentation
Poznámka

element **AGENDA/OBJEKT/BODBER/BVZOREK/BHODNOTA**

diagram

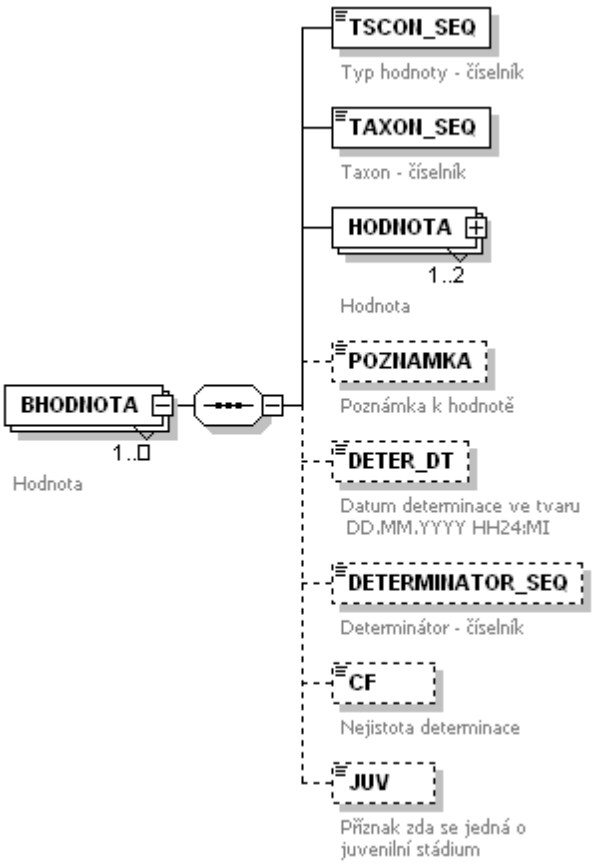

properties
- isRef 0
- minOcc 1
- maxOcc unbounded
- content complex

children **TSCON_SEQ** **TAXON_SEQ** **HODNOTA** **POZNAMKA** **DETER_DT** **DETERMINATOR_SEQ** **CF** **JUV**

annotation
documentation
Hodnota

element **AGENDA/OBJEKT/BODBER/BVZOREK/BHODNOTA/TSCON_SEQ**

diagram

type **B_TSCON_SMPL**

properties
- isRef 0
- content simple

facets
- enumeration POCET
- enumeration POKRYV
- enumeration STUPEN

annotation
documentation
Typ hodnoty - číselník

element **AGENDA/OBJEKT/BODBER/BVZOREK/BHODNOTA/TAXON_SEQ**

diagram

properties
- isRef 0

annotation documentation
Taxon - číselník

element **AGENDA/OBJEKT/BODBER/BVZOREK/BHODNOTA/HODNOTA**

diagram

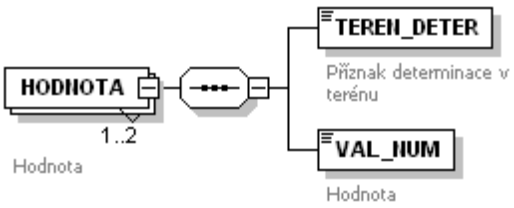

properties
isRef 0
minOcc 1
maxOcc 2
content complex

children **TEREN_DETER** **VAL_NUM**

annotation documentation
Hodnota

element **AGENDA/OBJEKT/BODBER/BVZOREK/BHODNOTA/HODNOTA/TEREN_DETER**

diagram

type **ANO_NE_SMPL**

properties
isRef 0
content simple
default 1

facets
enumeration 1
enumeration 0

annotation documentation
Příznak determinace v terénu

element **AGENDA/OBJEKT/BODBER/BVZOREK/BHODNOTA/HODNOTA/VAL_NUM**

diagram

type **VAL_NUM_POSITIVE**

properties
isRef 0
content simple

facets
minInclusive 0

annotation documentation
Hodnota

element **AGENDA/OBJEKT/BODBER/BVZOREK/BHODNOTA/POZNAMKA**

diagram

type **xsd:string**

properties
isRef 0
minOcc 0
maxOcc 1
content simple

annotation documentation
Poznámka k hodnotě

element **AGENDA/OBJEKT/BODBER/BVZOREK/BHODNOTA/DETER_DT**

diagram

type **xsd:string**

properties
- isRef 0
- minOcc 0
- maxOcc 1
- content simple

annotation
documentation
Datum determinace ve tvaru DD.MM.YYYY HH24:MI

element **AGENDA/OBJEKT/BODBER/BVZOREK/BHODNOTA/DETERMINATOR_SEQ**

diagram

properties
- isRef 0
- minOcc 0
- maxOcc 1

annotation
documentation
Determinátor - číselník

element **AGENDA/OBJEKT/BODBER/BVZOREK/BHODNOTA/CF**

diagram

type **ANO_NE_SMPL**

properties
- isRef 0
- minOcc 0
- maxOcc 1
- content simple

facets
- enumeration 1
- enumeration 0

annotation
documentation
Nejistota determinace

element **AGENDA/OBJEKT/BODBER/BVZOREK/BHODNOTA/JUV**

diagram

type **ANO_NE_SMPL**

properties
- isRef 0
- minOcc 0
- maxOcc 1
- content simple

facets
- enumeration 1
- enumeration 0

annotation
documentation
Příznak zda se jedná o juvenilní stádium

complexType **M_CERPANI**

diagram

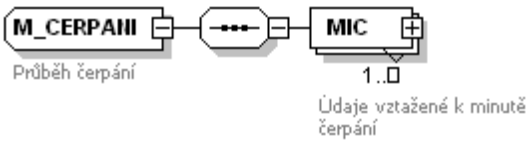

children **MIC**

used by element **M_TYP_ODB/CERPANY/CERPANI**

annotation documentation
Průběh čerpání

element **M_CERPANI/MIC**

diagram

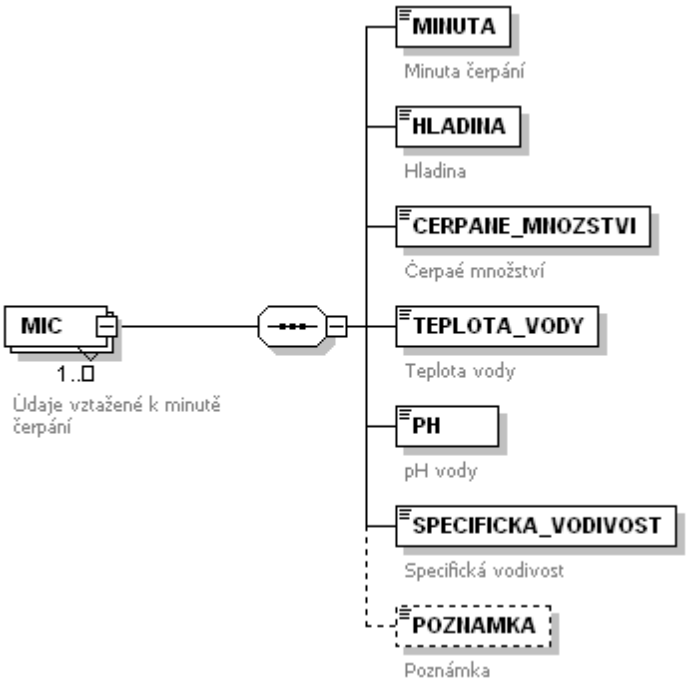

properties
isRef 0
minOcc 1
maxOcc unbounded
content complex

children **MINUTA HLADINA CERPANE_MNOZSTVI TEPLOTA_VODY PH SPECIFICKA_VODIVOST POZNAMKA**

annotation documentation
Údaje vztažené k minutě čerpání

element **M_CERPANI/MIC/MINUTA**

diagram

type **xsd:positiveInteger**

properties
isRef 0
content simple

annotation documentation
Minuta čerpání

element **M_CERPANI/MIC/HLADINA**

diagram

type **xsd:float**

properties
- isRef 0
- content simple

annotation
- documentation
  Hladina

element **M_CERPANI/MIC/CERPANE_MNOZSTVI**

diagram

type **xsd:float**

properties
- isRef 0
- content simple

annotation
- documentation
  Čerpaé množství

element **M_CERPANI/MIC/TEPLOTA_VODY**

diagram

type **xsd:float**

properties
- isRef 0
- content simple

annotation
- documentation
  Teplota vody

element **M_CERPANI/MIC/PH**

diagram

type restriction of **xsd:float**

properties
- isRef 0
- content simple

facets
- minInclusive 0
- maxInclusive 12

annotation
- documentation
  pH vody

element **M_CERPANI/MIC/SPECIFICKA_VODIVOST**

diagram

type **xsd:float**

properties
- isRef 0
- content simple

annotation
- documentation
  Specifická vodivost

element **M_CERPANI/MIC/POZNAMKA**

diagram

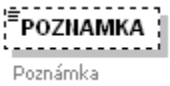

type **xsd:string**

properties
- isRef 0
- minOcc 0
- maxOcc 1
- content simple

annotation
documentation
Poznámka

complexType **M_MATR**

diagram

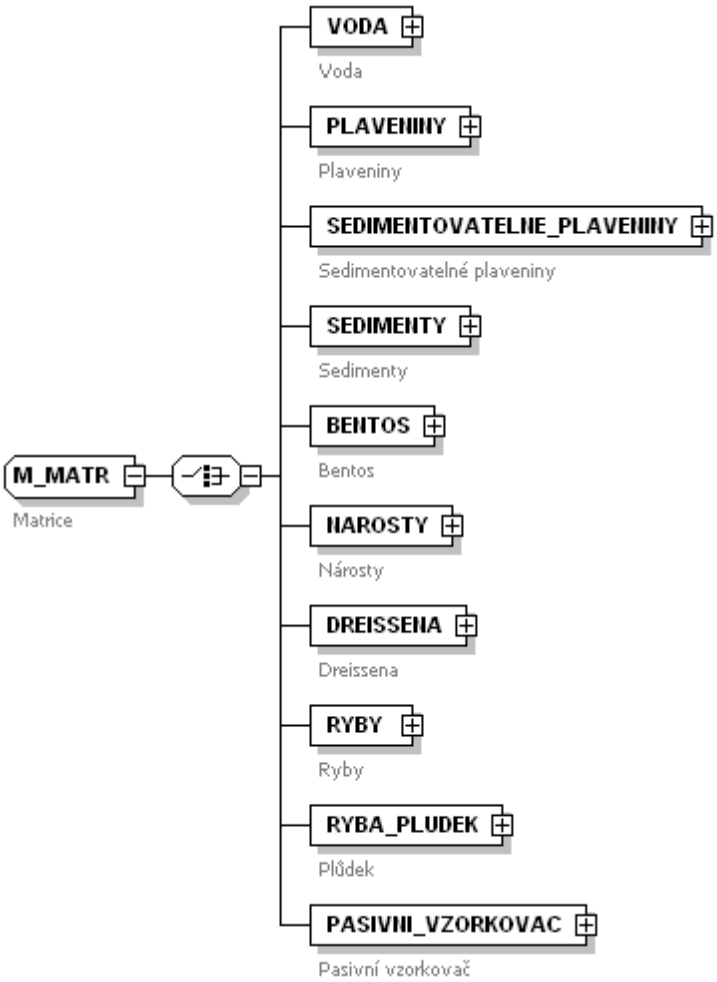

children **VODA** **PLAVENINY** **SEDIMENTOVATELNE_PLAVENINY** **SEDIMENTY** **BENTOS** **NAROSTY** **DREISSENA** **RYBY** **RYBA_PLUDEK** **PASIVNI_VZORKOVAC**

used by element **AGENDA/OBJEKT/ODBER/MATRICE**

annotation
documentation
Matrice

element **M_MATR/VODA**

diagram

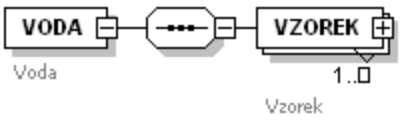

properties
- isRef 0
- content complex

children **VZOREK**

annotation
- documentation
  Voda

element **M_MATR/VODA/VZOREK**

diagram

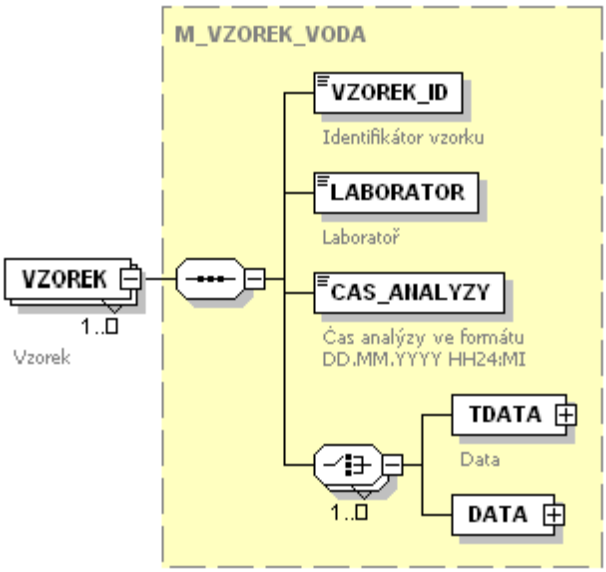

type **M_VZOREK_VODA**

properties
- isRef 0
- minOcc 1
- maxOcc unbounded
- content complex

children **VZOREK_ID** **LABORATOR** **CAS_ANALYZY** **TDATA** **DATA**

annotation
- documentation
  Vzorek

element **M_MATR/PLAVENINY**

diagram

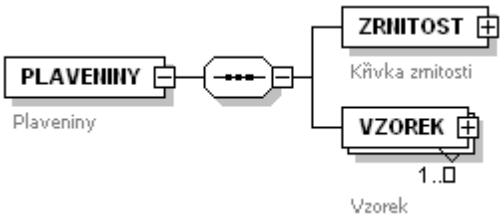

properties
- isRef 0
- content complex

children **ZRNITOST** **VZOREK**

annotation
- documentation
  Plaveniny

element **M_MATR/PLAVENINY/ZRNITOST**

diagram

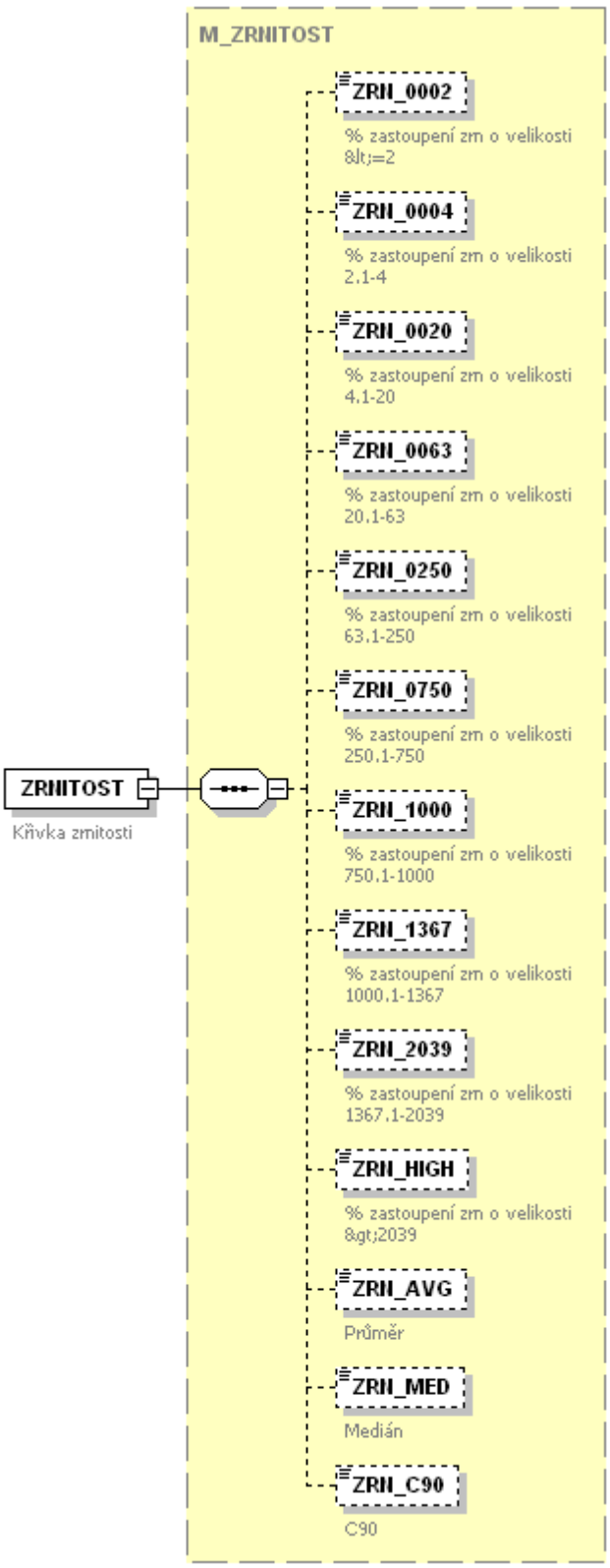

type **M_ZRNITOST**

properties
isRef 0
content complex

children **ZRN_0002** **ZRN_0004** **ZRN_0020** **ZRN_0063** **ZRN_0250** **ZRN_0750** **ZRN_1000** **ZRN_1367** **ZRN_2039** **ZRN_HIGH**

ZRN_AVG ZRN_MED ZRN_C90

annotation
documentation
Křivka zrnitosti

element **M_MATR/PLAVENINY/VZOREK**

diagram

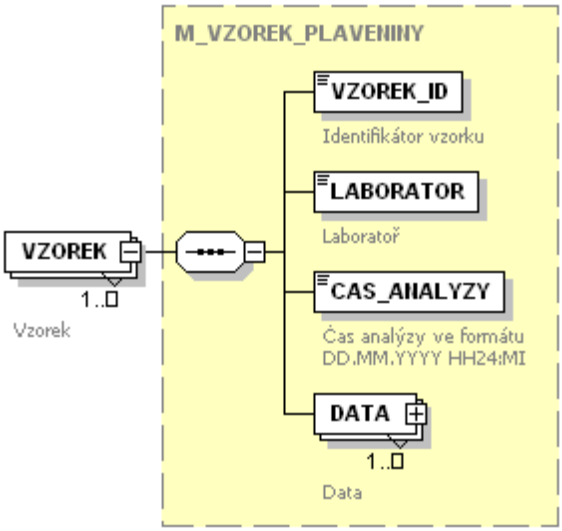

type **M_VZOREK_PLAVENINY**

properties
isRef 0
minOcc 1
maxOcc unbounded
content complex

children **VZOREK_ID** **LABORATOR** **CAS_ANALYZY** **DATA**

annotation
documentation
Vzorek

element **M_MATR/SEDIMENTOVATELNE_PLAVENINY**

diagram

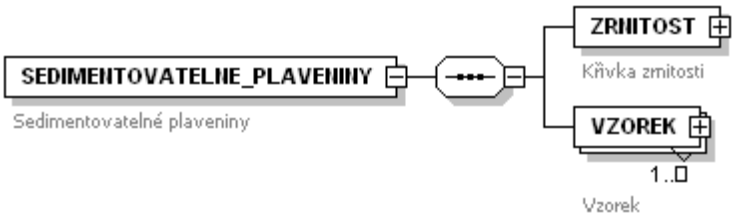

properties
isRef 0
content complex

children **ZRNITOST** **VZOREK**

annotation
documentation
Sedimentovatelné plaveniny

element **M_MATR/SEDIMENTOVATELNE_PLAVENINY/ZRNITOST**

diagram

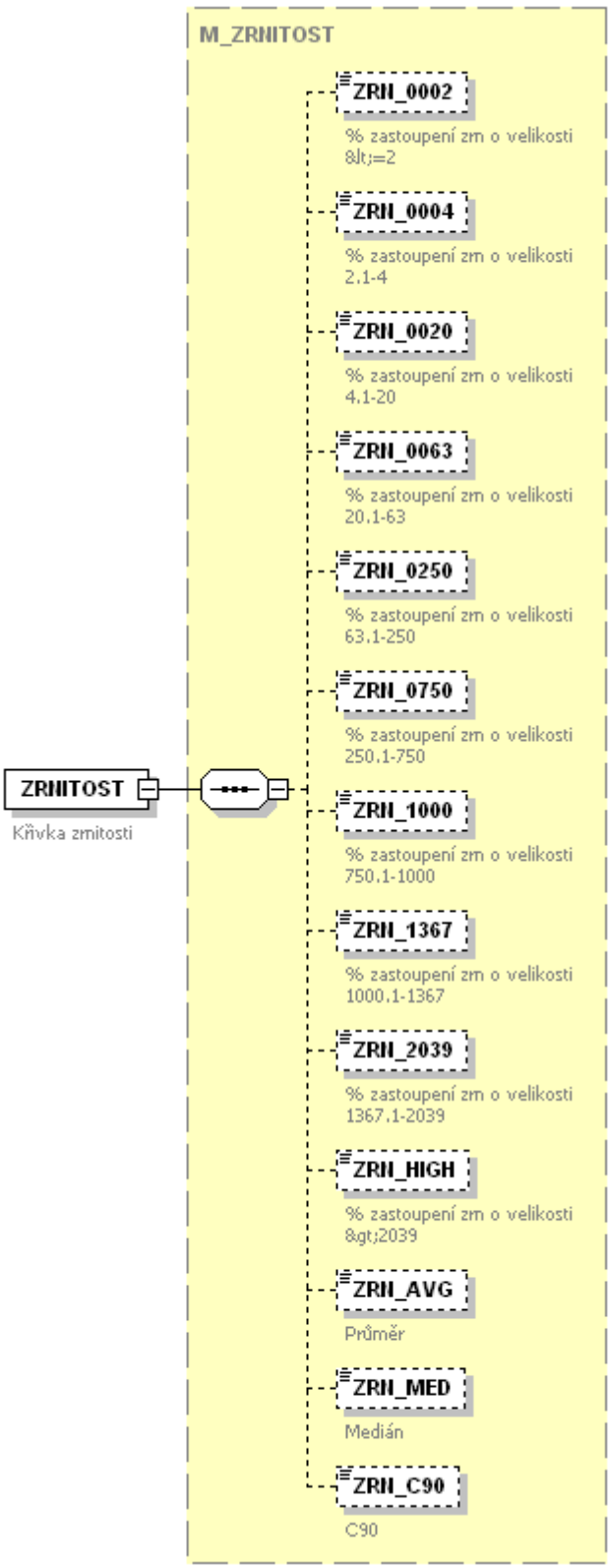

type **M_ZRNITOST**

properties
- isRef 0
- content complex

children **ZRN_0002** **ZRN_0004** **ZRN_0020** **ZRN_0063** **ZRN_0250** **ZRN_0750** **ZRN_1000** **ZRN_1367** **ZRN_2039** **ZRN_HIGH**

ZRN_AVG ZRN_MED ZRN_C90

annotation documentation
Křivka zrnitosti

element M_MATR/SEDIMENTOVATELNE_PLAVENINY/VZOREK

diagram

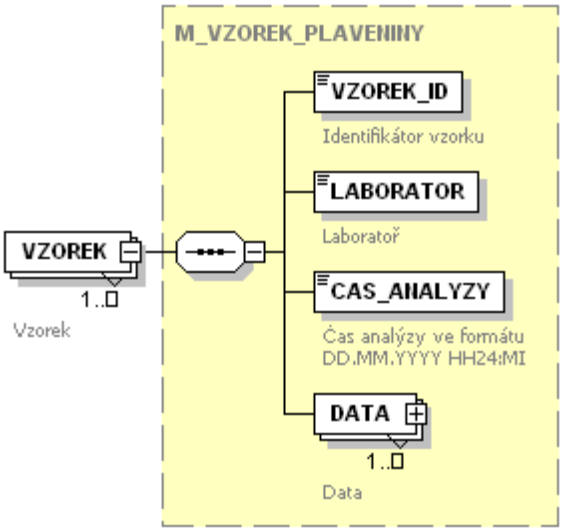

type M_VZOREK_PLAVENINY

properties
isRef 0
minOcc 1
maxOcc unbounded
content complex

children VZOREK_ID LABORATOR CAS_ANALYZY DATA

annotation documentation
Vzorek

element M_MATR/SEDIMENTY

diagram

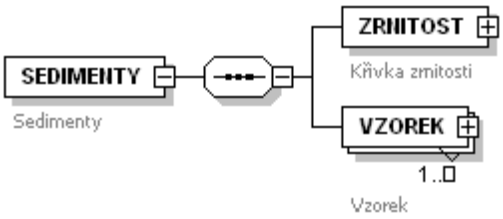

properties
isRef 0
content complex

children ZRNITOST VZOREK

annotation documentation
Sedimenty

element **M_MATR/SEDIMENTY/ZRNITOST**

diagram

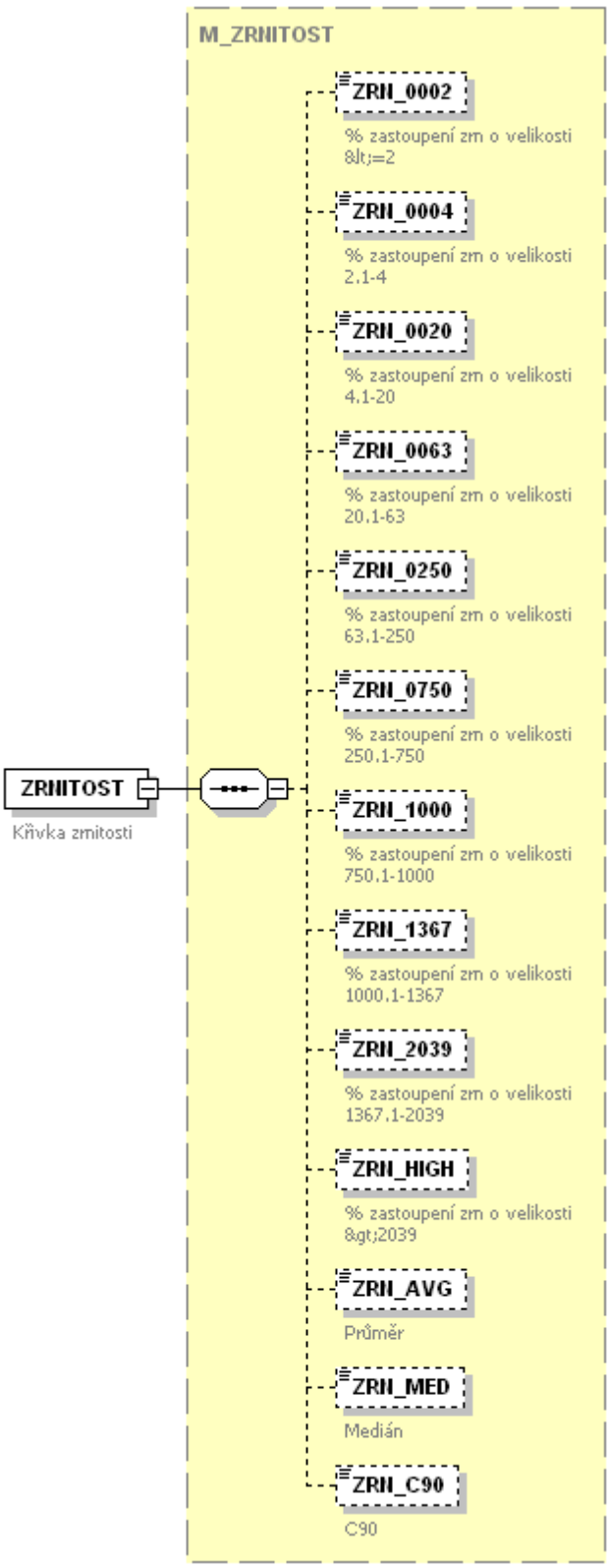

type **M_ZRNITOST**

properties
isRef 0
content complex

children **ZRN_0002** **ZRN_0004** **ZRN_0020** **ZRN_0063** **ZRN_0250** **ZRN_0750** **ZRN_1000** **ZRN_1367** **ZRN_2039** **ZRN_HIGH**

ZRN_AVG ZRN_MED ZRN_C90

annotation documentation
Křivka zrnitosti

element M_MATR/SEDIMENTY/VZOREK

diagram

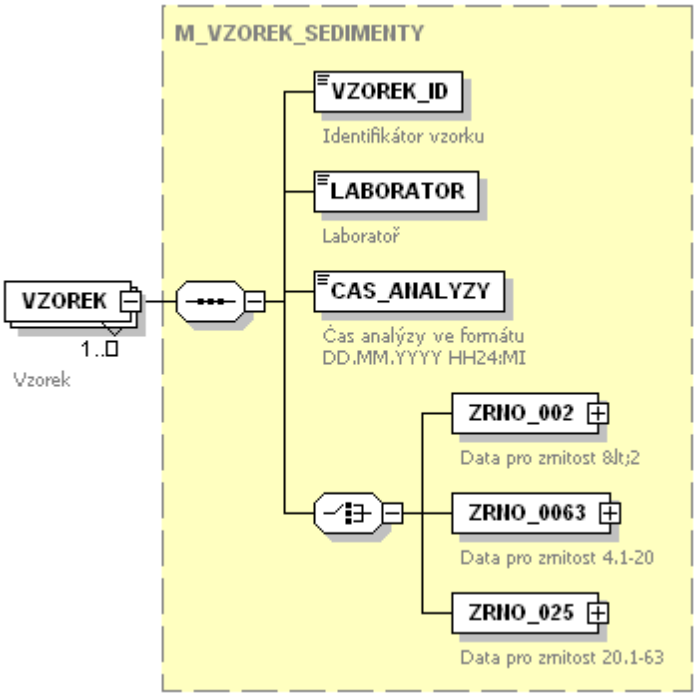

type M_VZOREK_SEDIMENTY

properties
isRef 0
minOcc 1
maxOcc unbounded
content complex

children VZOREK_ID LABORATOR CAS_ANALYZY ZRNO_002 ZRNO_0063 ZRNO_025

annotation documentation
Vzorek

element M_MATR/BENTOS

diagram

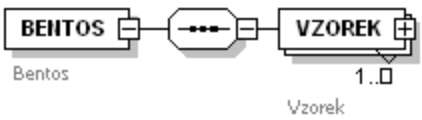

properties
isRef 0
content complex

children VZOREK

annotation documentation
Bentos

element **M_MATR/BENTOS/VZOREK**

diagram

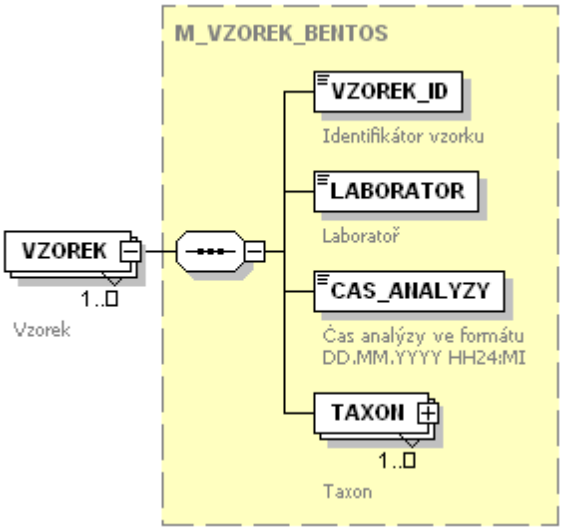

type **M_VZOREK_BENTOS**

properties
- isRef 0
- minOcc 1
- maxOcc unbounded
- content complex

children **VZOREK_ID** **LABORATOR** **CAS_ANALYZY** **TAXON**

annotation
documentation
Vzorek

element **M_MATR/NAROSTY**

diagram

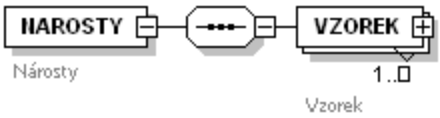

properties
- isRef 0
- content complex

children **VZOREK**

annotation
documentation
Nárosty

element **M_MATR/NAROSTY/VZOREK**

diagram

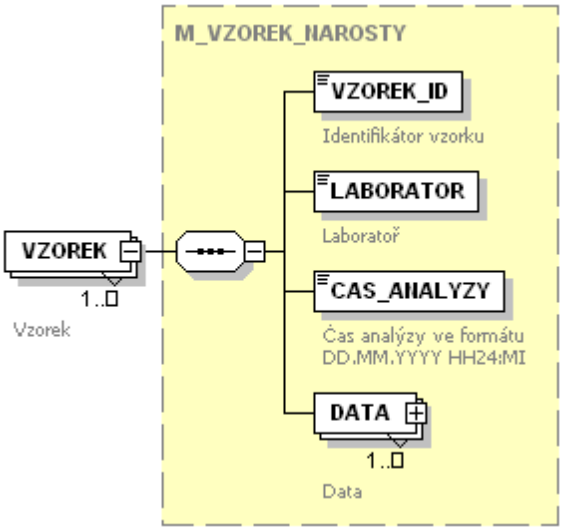

type **M_VZOREK_NAROSTY**

properties
- isRef 0
- minOcc 1
- maxOcc unbounded
- content complex

children **VZOREK_ID** **LABORATOR** **CAS_ANALYZY** **DATA**

annotation
documentation
Vzorek

element **M_MATR/DREISSENA**

diagram

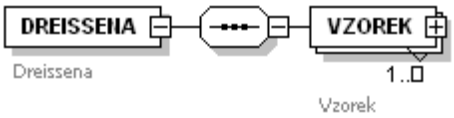

properties
- isRef 0
- content complex

children **VZOREK**

annotation
documentation
Dreissena

element **M_MATR/DREISSENA/VZOREK**

diagram

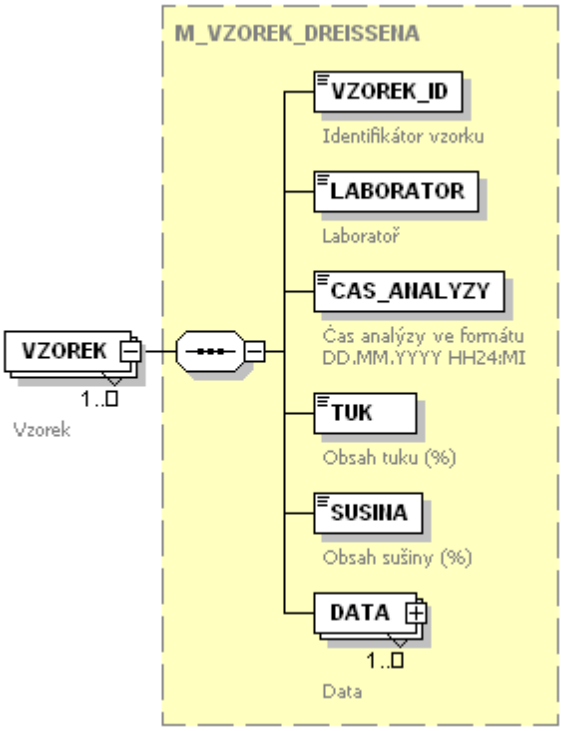

type **M_VZOREK_DREISSENA**

properties
- isRef 0
- minOcc 1
- maxOcc unbounded
- content complex

children **VZOREK_ID** **LABORATOR** **CAS_ANALYZY** **TUK** **SUSINA** **DATA**

annotation
documentation
Vzorek

element **M_MATR/RYBY**

diagram

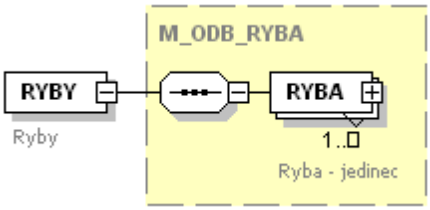

type **M_ODB_RYBA**

properties
- isRef 0
- content complex

children **RYBA**

annotation
documentation
Ryby

element **M_MATR/RYBA_PLUDEK**

diagram

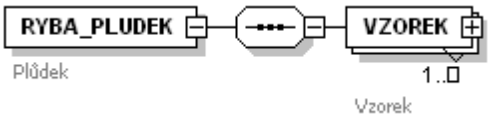

properties
isRef 0
content complex

children **VZOREK**

annotation
documentation
Plůdek

element **M_MATR/RYBA_PLUDEK/VZOREK**

diagram

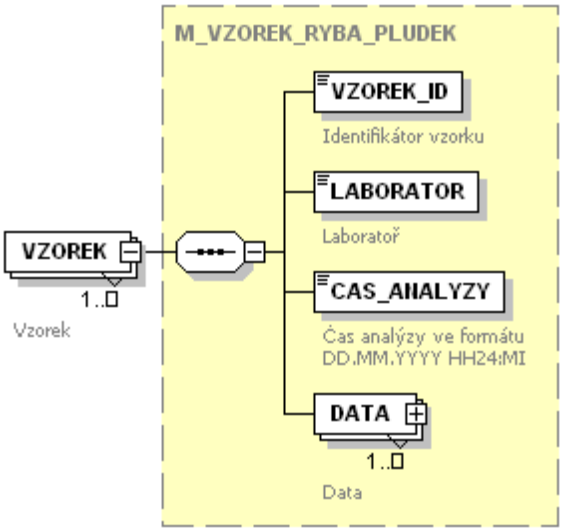

type **M_VZOREK_RYBA_PLUDEK**

properties
isRef 0
minOcc 1
maxOcc unbounded
content complex

children **VZOREK_ID** **LABORATOR** **CAS_ANALYZY** **DATA**

annotation
documentation
Vzorek

element **M_MATR/PASIVNI_VZORKOVAC**

diagram

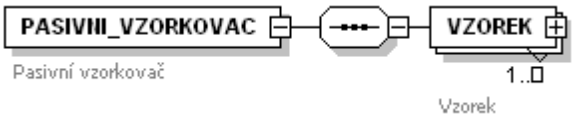

properties
isRef 0
content complex

children **VZOREK**

annotation
documentation
Pasivní vzorkovač

element **M_MATR/PASIVNI_VZORKOVAC/VZOREK**

diagram

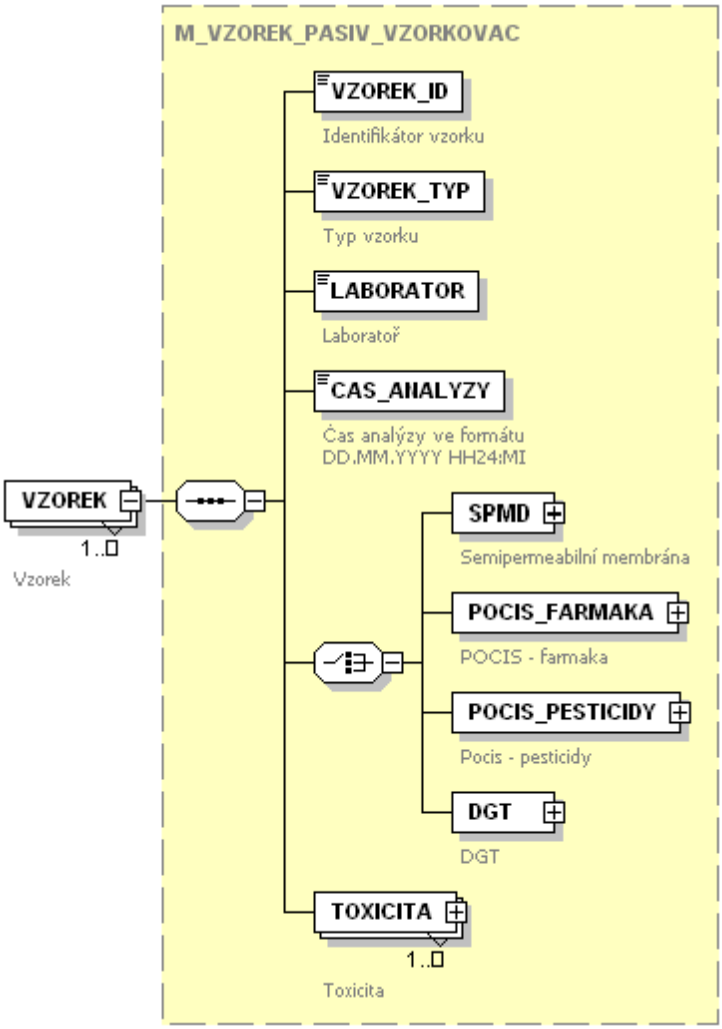

type **M_VZOREK_PASIV_VZORKOVAC**

properties
- isRef 0
- minOcc 1
- maxOcc unbounded
- content complex

children **VZOREK_ID** **VZOREK_TYP** **LABORATOR** **CAS_ANALYZY** **SPMD** **POCIS_FARMAKA** **POCIS_PESTICIDY** **DGT** **TOXICITA**

annotation
documentation
Vzorek

complexType **M_ODB_RYBA**

diagram

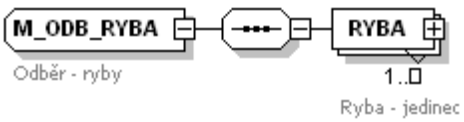

children **RYBA**

used by
element **M_MATR/RYBY**

annotation
documentation
Odběr - ryby

element **M_ODB_RYBA/RYBA**

diagram

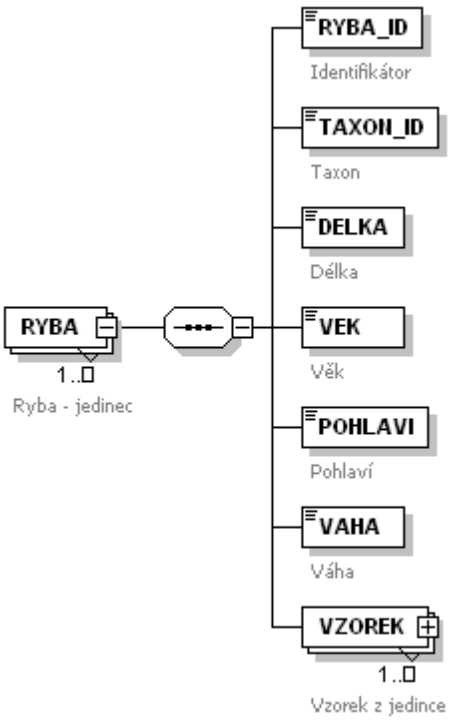

properties
- isRef 0
- minOcc 1
- maxOcc unbounded
- content complex

children **RYBA_ID** **TAXON_ID** **DELKA** **VEK** **POHLAVI** **VAHA** **VZOREK**

annotation
documentation
Ryba - jedinec

element **M_ODB_RYBA/RYBA/RYBA_ID**

diagram

type **xsd:positiveInteger**

properties
- isRef 0
- content simple

annotation
documentation
Identifikátor

element **M_ODB_RYBA/RYBA/TAXON_ID**

diagram

type **xsd:string**

properties
- isRef 0
- content simple

annotation
documentation
Taxon

element **M_ODB_RYBA/RYBA/DELKA**

diagram

type **xsd:float**

properties
- isRef 0
- content simple

annotation
- documentation
  Délka

element **M_ODB_RYBA/RYBA/VEK**

diagram

type **xsd:float**

properties
- isRef 0
- content simple

annotation
- documentation
  Věk

element **M_ODB_RYBA/RYBA/POHLAVI**

diagram

type **POHLAVI**

properties
- isRef 0
- content simple

facets
- enumeration M
- enumeration F

annotation
- documentation
  Pohlaví

element **M_ODB_RYBA/RYBA/VAHA**

diagram

type **xsd:float**

properties
- isRef 0
- content simple

annotation
- documentation
  Váha

element **M_ODB_RYBA/RYBA/VZOREK**

diagram

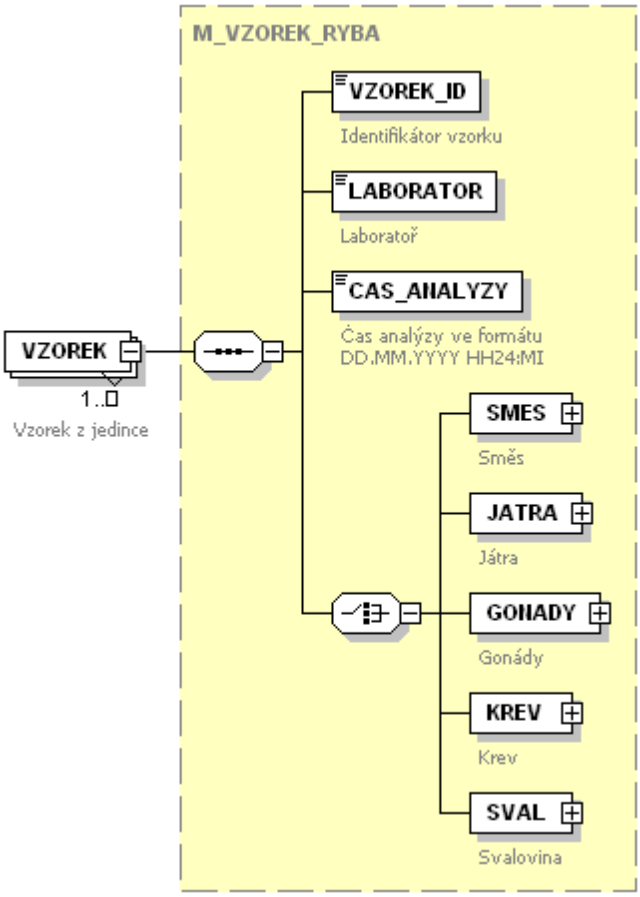

type **M_VZOREK_RYBA**

properties
- isRef 0
- minOcc 1
- maxOcc unbounded
- content complex

children **VZOREK_ID** **LABORATOR** **CAS_ANALYZY** **SMES** **JATRA** **GONADY** **KREV** **SVAL**

annotation
documentation
Vzorek z jedince

complexType **M_PRETOK**

diagram

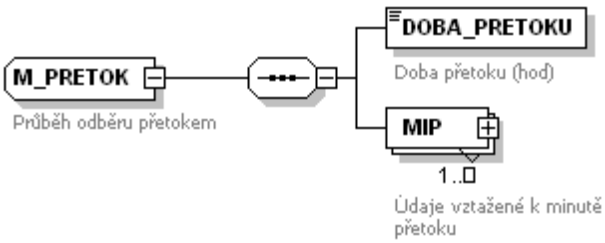

children **DOBA_PRETOKU** **MIP**

used by
element **M_TYP_ODB/BODOVY/PRETOK**

annotation
documentation
Průběh odběru přetokem

element **M_PRETOK/DOBA_PRETOKU**

diagram

type **xsd:float**

properties
isRef 0
content simple

annotation
documentation
Doba přetoku (hod)

element **M_PRETOK/MIP**

diagram

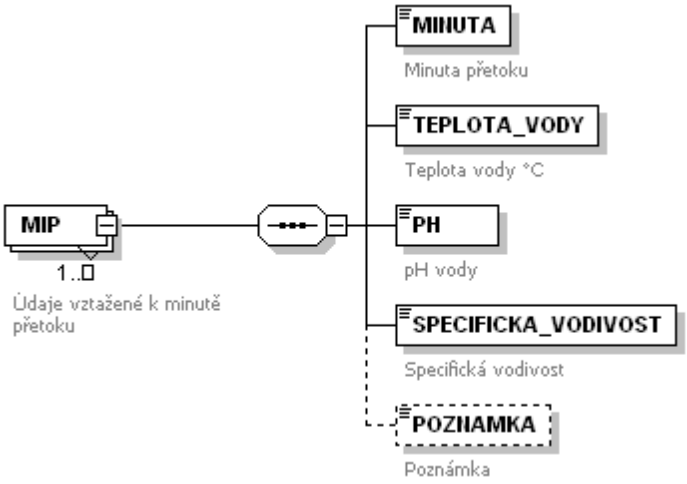

properties
isRef 0
minOcc 1
maxOcc unbounded
content complex

children **MINUTA** **TEPLOTA_VODY** **PH** **SPECIFICKA_VODIVOST** **POZNAMKA**

annotation
documentation
Údaje vztažené k minutě přetoku

element **M_PRETOK/MIP/MINUTA**

diagram

type **xsd:positiveInteger**

properties
isRef 0
content simple

annotation
documentation
Minuta přetoku

element **M_PRETOK/MIP/TEPLOTA_VODY**

diagram

type **xsd:float**

properties
isRef 0
content simple

annotation
documentation
Teplota vody °C

element **M_PRETOK/MIP/PH**

diagram

type restriction of **xsd:float**

properties
- isRef 0
- content simple

facets
- minInclusive 0
- maxInclusive 12

annotation
- documentation
  pH vody

element **M_PRETOK/MIP/SPECIFICKA_VODIVOST**

diagram

type **xsd:float**

properties
- isRef 0
- content simple

annotation
- documentation
  Specifická vodivost

element **M_PRETOK/MIP/POZNAMKA**

diagram

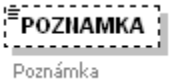

type **xsd:string**

properties
- isRef 0
- minOcc 0
- maxOcc 1
- content simple

annotation
- documentation
  Poznámka

complexType **M_RYBA_DATA**

diagram

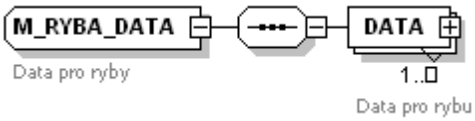

children **DATA**

used by
- elements **M_VZOREK_RYBA/GONADY** **M_VZOREK_RYBA/JATRA** **M_VZOREK_RYBA/KREV** **M_VZOREK_RYBA/SMES** **M_VZOREK_RYBA/SVAL**

annotation
- documentation
  Data pro ryby

element **M_RYBA_DATA/DATA**

diagram

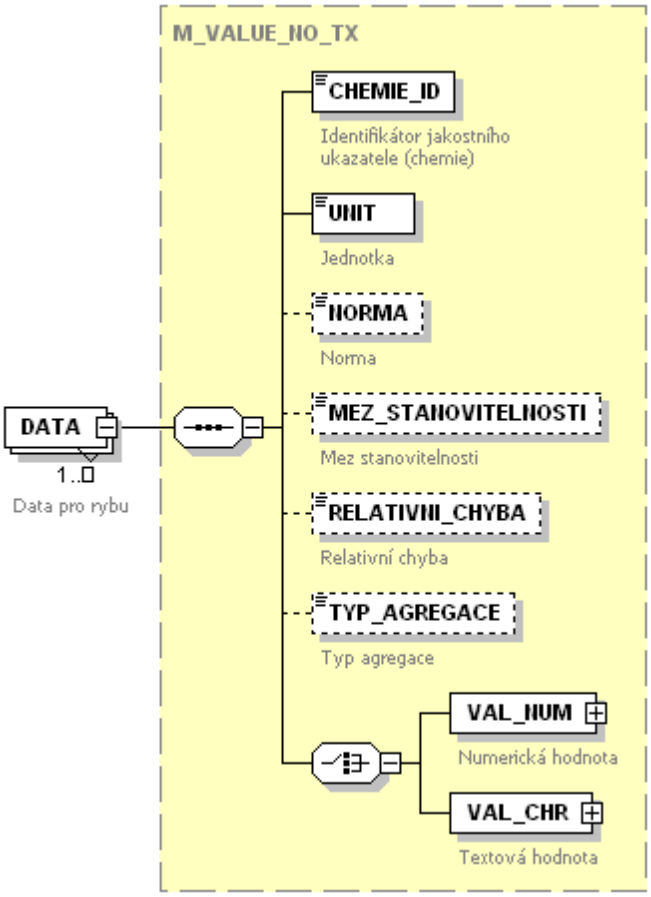

type **M_VALUE_NO_TX**

properties
- isRef 0
- minOcc 1
- maxOcc unbounded
- content complex

children **CHEMIE_ID** **UNIT** **NORMA** **MEZ_STANOVITELNOSTI** **RELATIVNI_CHYBA** **TYP_AGREGACE** **VAL_NUM** **VAL_CHR**

annotation
documentation
Data pro rybu

complexType **M_TOXICITA**

diagram

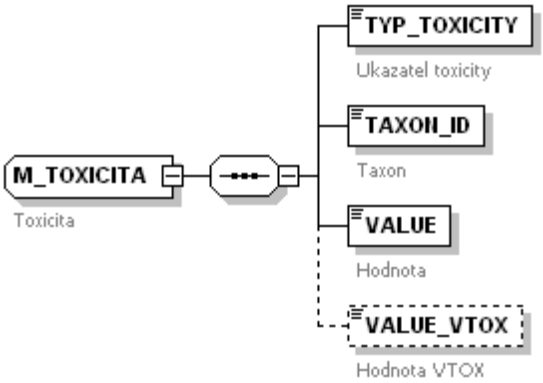

children **TYP_TOXICITY** **TAXON_ID** **VALUE** **VALUE_VTOX**

used by element **M_VZOREK_PASIV_VZORKOVAC/TOXICITA**

annotation documentation
Toxicita

element **M_TOXICITA/TYP_TOXICITY**

diagram

type **TYP_TOXICITY**

properties
isRef 0
content simple

facets
enumeration LC50
enumeration EC50
enumeration IC

annotation documentation
Ukazatel toxicity

element **M_TOXICITA/TAXON_ID**

diagram

type **xsd:string**

properties
isRef 0
content simple

annotation documentation
Taxon

element **M_TOXICITA/VALUE**

diagram

type **xsd:float**

properties
isRef 0
content simple

annotation documentation
Hodnota

element **M_TOXICITA/VALUE_VTOX**

diagram

type **xsd:float**

properties
isRef 0
minOcc 0
maxOcc 1
content simple

annotation documentation
Hodnota VTOX

complexType **M_TYP_ODB**

diagram

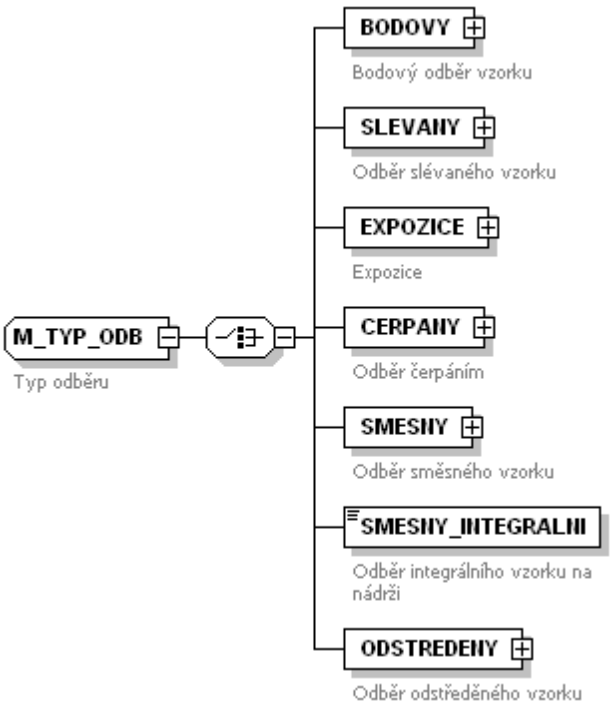

children **BODOVY** **SLEVANY** **EXPOZICE** **CERPANY** **SMESNY** **SMESNY_INTEGRALNI** **ODSTREDENY**

used by element **AGENDA/OBJEKT/ODBER/TYP_ODBERU**

annotation documentation
Typ odběru

element **M_TYP_ODB/BODOVY**

diagram

properties
isRef 0
content complex
nillable true

children **PRETOK**

annotation documentation
Bodový odběr vzorku

element **M_TYP_ODB/BODOVY/PRETOK**

diagram

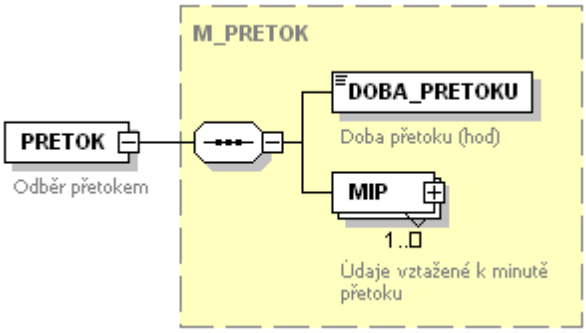

type **M_PRETOK**

properties isRef 0
content complex

children **DOBA_PRETOKU** **MIP**

annotation documentation
Odběr přetokem

element **M_TYP_ODB/SLEVANY**

diagram

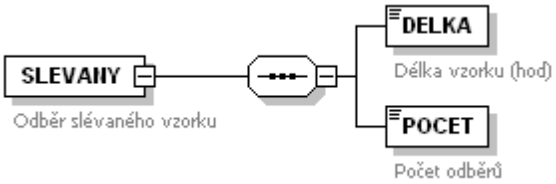

properties isRef 0
content complex

children **DELKA** **POCET**

annotation documentation
Odběr slévaného vzorku

element **M_TYP_ODB/SLEVANY/DELKA**

diagram

type **xsd:positiveInteger**

properties isRef 0
content simple

annotation documentation
Délka vzorku (hod)

element **M_TYP_ODB/SLEVANY/POCET**

diagram

type **xsd:positiveInteger**

properties isRef 0
content simple

annotation documentation
Počet odběrů

element **M_TYP_ODB/EXPOZICE**

diagram

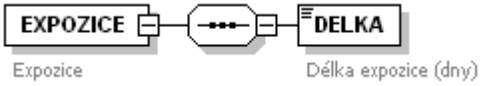

properties isRef 0
content complex

children **DELKA**

annotation documentation
Expozice

element **M_TYP_ODB/EXPOZICE/DELKA**

diagram

type **xsd:positiveInteger**

properties
isRef 0
content simple

annotation
documentation
Délka expozice (dny)

element **M_TYP_ODB/CERPANY**

diagram

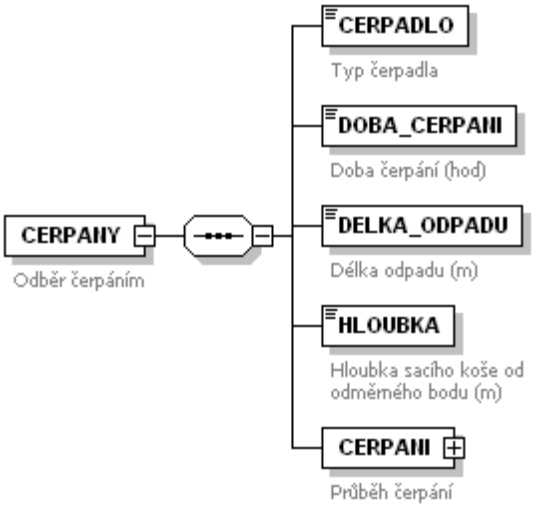

properties
isRef 0
content complex

children **CERPADLO DOBA_CERPANI DELKA_ODPADU HLOUBKA CERPANI**

annotation
documentation
Odběr čerpáním

element **M_TYP_ODB/CERPANY/CERPADLO**

diagram

type **CERPADLO_TYP**

properties
isRef 0
content simple

facets
enumeration OBEHOVE
enumeration VIBRACNI
enumeration SACI
enumeration VZORKOVAC

annotation
documentation
Typ čerpadla

element **M_TYP_ODB/CERPANY/DOBA_CERPANI**

diagram

type **xsd:float**

properties
isRef 0
content simple

annotation
documentation
Doba čerpání (hod)

element **M_TYP_ODB/CERPANY/DELKA_ODPADU**

diagram

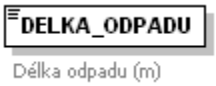

type **xsd:float**

properties
isRef 0
content simple

annotation
documentation
Délka odpadu (m)

element **M_TYP_ODB/CERPANY/HLOUBKA**

diagram

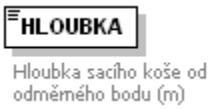

type **xsd:float**

properties
isRef 0
content simple

annotation
documentation
Hloubka sacího koše od odměrného bodu (m)

element **M_TYP_ODB/CERPANY/CERPANI**

diagram

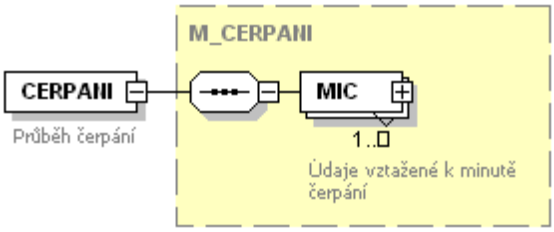

type **M_CERPANI**

properties
isRef 0
content complex

children **MIC**

annotation
documentation
Průběh čerpání

element **M_TYP_ODB/SMESNY**

diagram

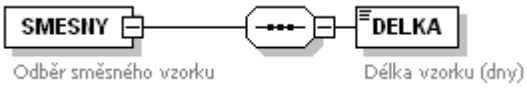

properties
isRef 0
content complex

children **DELKA**

annotation
documentation
Odběr směsného vzorku

element **M_TYP_ODB/SMESNY/DELKA**

diagram

type **xsd:positiveInteger**

properties
isRef 0
content simple

annotation
documentation
Délka vzorku (dny)

element **M_TYP_ODB/SMESNY_INTEGRALNI**

diagram

properties
isRef 0
nillable true

annotation
documentation
Odběr integrálního vzorku na nádrži

element **M_TYP_ODB/ODSTREDENY**

diagram

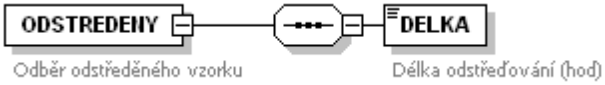

properties
isRef 0
content complex

children **DELKA**

annotation
documentation
Odběr odstředěného vzorku

element **M_TYP_ODB/ODSTREDENY/DELKA**

diagram

type **xsd:positiveInteger**

properties
isRef 0
content simple

annotation
documentation
Délka odstřeďování (hod)

complexType **M_VALUE**

diagram

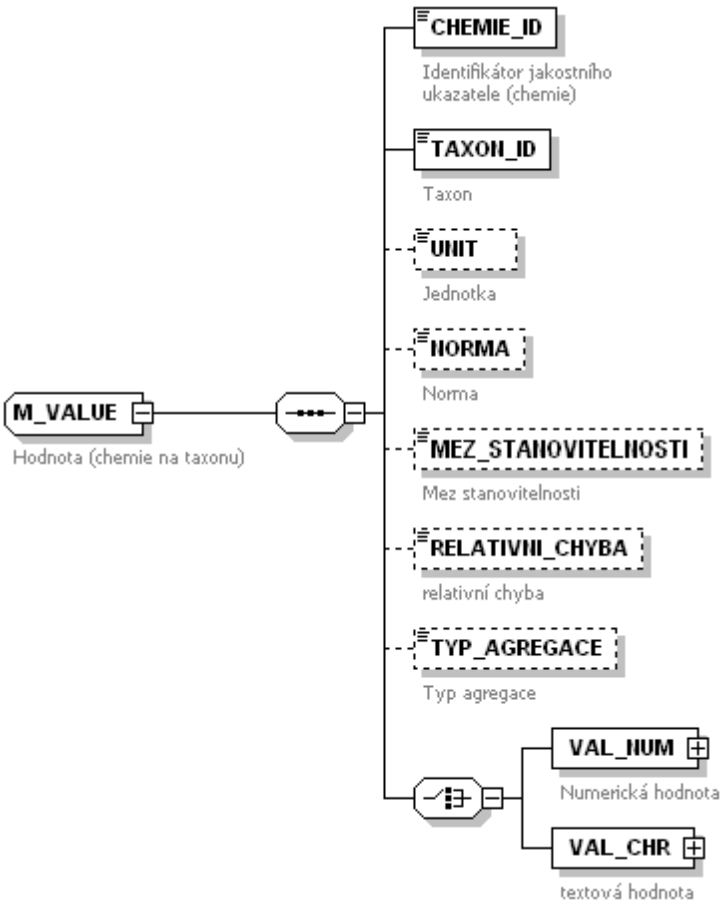

children **CHEMIE_ID** **TAXON_ID** **UNIT** **NORMA** **MEZ_STANOVITELNOSTI** **RELATIVNI_CHYBA** **TYP_AGREGACE** **VAL_NUM** **VAL_CHR**

used by element **M_VZOREK_VODA/TDATA**

annotation documentation
Hodnota (chemie na taxonu)

element **M_VALUE/CHEMIE_ID**

diagram

type **xsd:string**

properties isRef 0
content simple

annotation documentation
Identifikátor jakostního ukazatele (chemie)

element **M_VALUE/TAXON_ID**

diagram

type **xsd:string**

properties isRef 0
content simple

annotation documentation
Taxon

element **M_VALUE/UNIT**

diagram

type **xsd:string**

properties
isRef 0
minOcc 0
maxOcc 1
content simple

annotation documentation
Jednotka

element **M_VALUE/NORMA**

diagram

type **xsd:string**

properties
isRef 0
minOcc 0
maxOcc 1
content simple

annotation documentation
Norma

element **M_VALUE/MEZ_STANOVITELNOSTI**

diagram

type **xsd:float**

properties
isRef 0
minOcc 0
maxOcc 1
content simple

annotation documentation
Mez stanovitelnosti

element **M_VALUE/RELATIVNI_CHYBA**

diagram

type **xsd:float**

properties
isRef 0
minOcc 0
maxOcc 1
content simple

annotation documentation
relativní chyba

element **M_VALUE/TYP_AGREGACE**

diagram

type **xsd:string**

properties
isRef 0
minOcc 0
maxOcc 1
content simple

annotation
documentation
Typ agregace

element **M_VALUE/VAL_NUM**

diagram

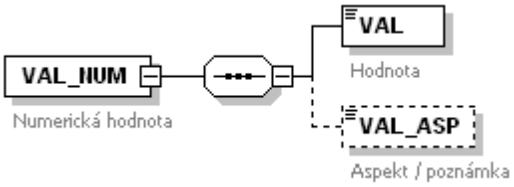

properties
isRef 0
content complex

children **VAL** **VAL_ASP**

annotation
documentation
Numerická hodnota

element **M_VALUE/VAL_NUM/VAL**

diagram

type **xsd:float**

properties
isRef 0
content simple

annotation
documentation
Hodnota

element **M_VALUE/VAL_NUM/VAL_ASP**

diagram

type **xsd:string**

properties
isRef 0
minOcc 0
maxOcc 1
content simple

annotation
documentation
Aspekt / poznámka

element **M_VALUE/VAL_CHR**

diagram

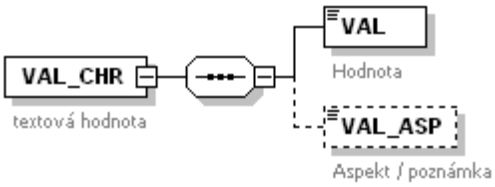

properties
isRef 0
content complex

children **VAL** **VAL_ASP**

annotation
documentation
textová hodnota

element **M_VALUE/VAL_CHR/VAL**

diagram

type **xsd:string**

properties
- isRef 0
- content simple

annotation
- documentation
  Hodnota

element **M_VALUE/VAL_CHR/VAL_ASP**

diagram

type **xsd:string**

properties
- isRef 0
- minOcc 0
- maxOcc 1
- content simple

annotation
- documentation
  Aspekt / poznámka

complexType **M_VALUE_NO_TX**

diagram

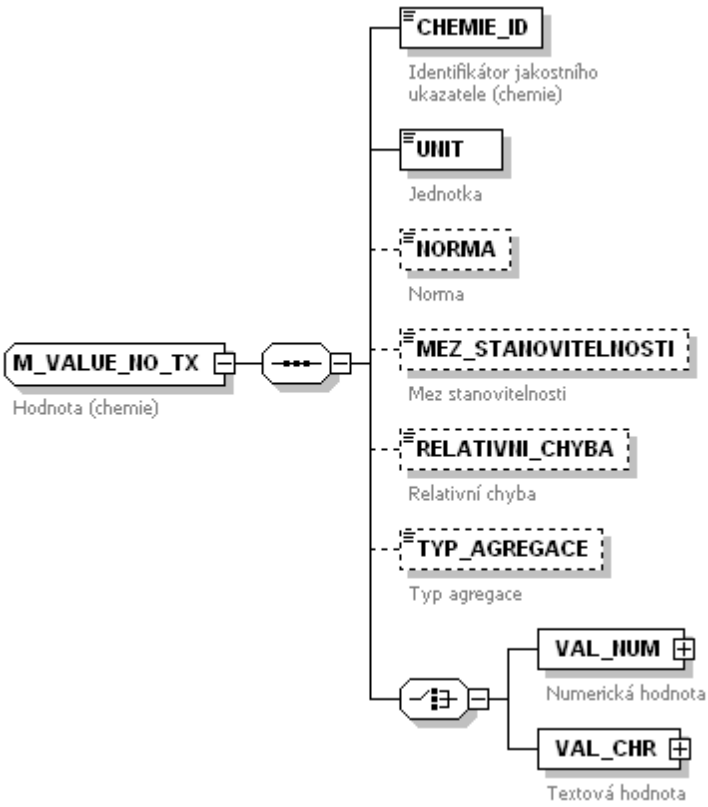

children CHEMIE_ID UNIT NORMA MEZ_STANOVITELNOSTI RELATIVNI_CHYBA TYP_AGREGACE VAL_NUM VAL_CHR

used by
- elements M_RYBA_DATA/DATA M_VZOREK_PASIV_VZORKOVAC/SPMD/DATA
  M_VZOREK_PASIV_VZORKOVAC/POCIS_FARMAKA/DATA
  M_VZOREK_PASIV_VZORKOVAC/POCIS_PESTICIDY/DATA
  M_VZOREK_PASIV_VZORKOVAC/DGT/DATA
  M_VZOREK_VODA/DATA M_VZOREK_DREISSENA/DATA

M_VZOREK_NAROSTY/DATA M_VZOREK_PLAVENINY/DATA
M_VZOREK_RYBA_PLUDEK/DATA
M_VZOREK_BENTOS/TAXON/DATA
M_VZOREK_SEDIMENTY/ZRNO_002
M_VZOREK_SEDIMENTY/ZRNO_0063
M_VZOREK_SEDIMENTY/ZRNO_025

annotation
documentation
Hodnota (chemie)

element **M_VALUE_NO_TX/CHEMIE_ID**

diagram

type **xsd:string**

properties
isRef 0
content simple

annotation
documentation
Identifikátor jakostního ukazatele (chemie)

element **M_VALUE_NO_TX/UNIT**

diagram

type **xsd:string**

properties
isRef 0
content simple

annotation
documentation
Jednotka

element **M_VALUE_NO_TX/NORMA**

diagram

type **xsd:string**

properties
isRef 0
minOcc 0
maxOcc 1
content simple

annotation
documentation
Norma

element **M_VALUE_NO_TX/MEZ_STANOVITELNOSTI**

diagram

type **xsd:float**

properties
isRef 0
minOcc 0
maxOcc 1
content simple

annotation
documentation
Mez stanovitelnosti

element **M_VALUE_NO_TX/RELATIVNI_CHYBA**

diagram

type **xsd:float**

properties
- isRef 0
- minOcc 0
- maxOcc 1
- content simple

annotation
documentation
Relativní chyba

element **M_VALUE_NO_TX/TYP_AGREGACE**

diagram

type **xsd:string**

properties
- isRef 0
- minOcc 0
- maxOcc 1
- content simple

annotation
documentation
Typ agregace

element **M_VALUE_NO_TX/VAL_NUM**

diagram

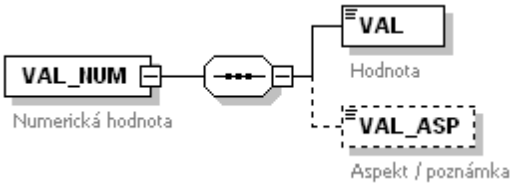

properties
- isRef 0
- content complex

children **VAL** **VAL_ASP**

annotation
documentation
Numerická hodnota

element **M_VALUE_NO_TX/VAL_NUM/VAL**

diagram

type **xsd:float**

properties
- isRef 0
- content simple

annotation
documentation
Hodnota

element **M_VALUE_NO_TX/VAL_NUM/VAL_ASP**

diagram

type **xsd:string**

properties
isRef 0
minOcc 0
maxOcc 1
content simple
annotation
documentation
Aspekt / poznámka

element **M_VALUE_NO_TX/VAL_CHR**

diagram

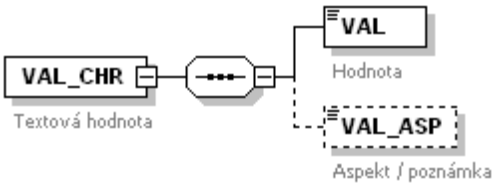

properties
isRef 0
content complex

children **VAL** **VAL_ASP**

annotation
documentation
Textová hodnota

element **M_VALUE_NO_TX/VAL_CHR/VAL**

diagram

type **xsd:string**

properties
isRef 0
content simple

annotation
documentation
Hodnota

element **M_VALUE_NO_TX/VAL_CHR/VAL_ASP**

diagram

type **xsd:string**

properties
isRef 0
minOcc 0
maxOcc 1
content simple

annotation
documentation
Aspekt / poznámka

complexType **M_VZOREK**

diagram

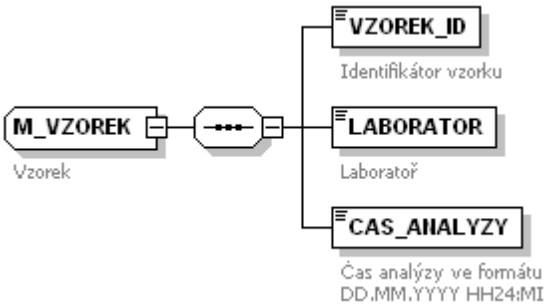

children **VZOREK_ID** **LABORATOR** **CAS_ANALYZY**

annotation documentation
Vzorek

element **M_VZOREK/VZOREK_ID**

diagram

type **S_VZOREK_ID**

properties isRef 0
content simple

annotation documentation
Identifikátor vzorku

element **M_VZOREK/LABORATOR**

diagram

type **S_LABORATOR**

properties isRef 0
content simple

annotation documentation
Laboratoř

element **M_VZOREK/CAS_ANALYZY**

diagram

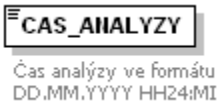

type **S_CAS_ANALYZY**

properties isRef 0
content simple

annotation documentation
Čas analýzy ve formátu DD.MM.YYYY HH24:MI

complexType **M_VZOREK_BENTOS**

diagram

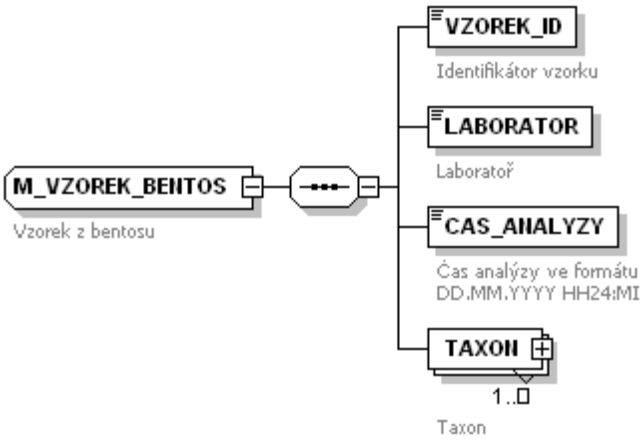

children **VZOREK_ID** **LABORATOR** **CAS_ANALYZY** **TAXON**

used by element **M_MATR/BENTOS/VZOREK**

annotation documentation
Vzorek z bentosu

element **M_VZOREK_BENTOS/VZOREK_ID**

diagram

type **S_VZOREK_ID**

properties
isRef 0
content simple

annotation
documentation
Identifikátor vzorku

element **M_VZOREK_BENTOS/LABORATOR**

diagram

type **S_LABORATOR**

properties
isRef 0
content simple

annotation
documentation
Laboratoř

element **M_VZOREK_BENTOS/CAS_ANALYZY**

diagram

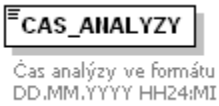

type **S_CAS_ANALYZY**

properties
isRef 0
content simple

annotation
documentation
Čas analýzy ve formátu DD.MM.YYYY HH24:MI

element **M_VZOREK_BENTOS/TAXON**

diagram

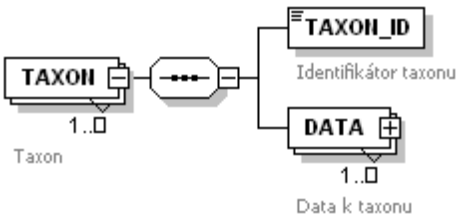

properties
isRef 0
minOcc 1
maxOcc unbounded
content complex

children **TAXON_ID** **DATA**

annotation
documentation
Taxon

element **M_VZOREK_BENTOS/TAXON/TAXON_ID**

diagram

type **xsd:string**

properties
isRef 0
content simple
annotation
documentation
Identifikátor taxonu

element **M_VZOREK_BENTOS/TAXON/DATA**

diagram

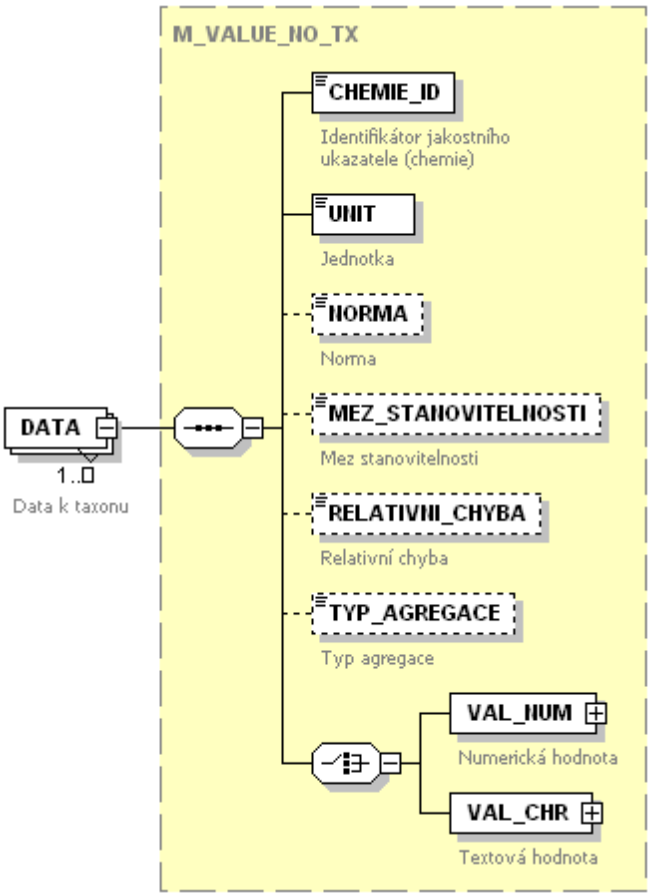

type **M_VALUE_NO_TX**

properties
isRef 0
minOcc 1
maxOcc unbounded
content complex

children **CHEMIE_ID** **UNIT** **NORMA** **MEZ_STANOVITELNOSTI** **RELATIVNI_CHYBA** **TYP_AGREGACE** **VAL_NUM** **VAL_CHR**

annotation
documentation
Data k taxonu

complexType **M_VZOREK_DREISSENA**

diagram

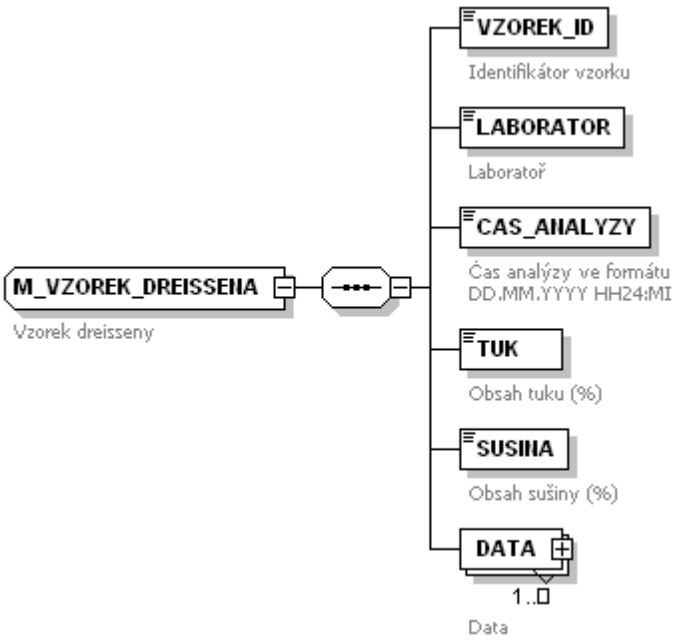

children **VZOREK_ID** **LABORATOR** **CAS_ANALYZY** **TUK** **SUSINA** **DATA**

used by element **M_MATR/DREISSENA/VZOREK**

annotation documentation
Vzorek dreisseny

element **M_VZOREK_DREISSENA/VZOREK_ID**

diagram

type **S_VZOREK_ID**

properties isRef 0
content simple

annotation documentation
Identifikátor vzorku

element **M_VZOREK_DREISSENA/LABORATOR**

diagram

type **S_LABORATOR**

properties isRef 0
content simple

annotation documentation
Laboratoř

element **M_VZOREK_DREISSENA/CAS_ANALYZY**

diagram

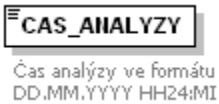

type **S_CAS_ANALYZY**

properties
isRef 0
content simple

annotation
documentation
Čas analýzy ve formátu DD.MM.YYYY HH24:MI

element **M_VZOREK_DREISSENA/TUK**

diagram

type **xsd:positiveInteger**

properties
isRef 0
content simple

annotation
documentation
Obsah tuku (%)

element **M_VZOREK_DREISSENA/SUSINA**

diagram

type **xsd:positiveInteger**

properties
isRef 0
content simple

annotation
documentation
Obsah sušiny (%)

element **M_VZOREK_DREISSENA/DATA**

diagram

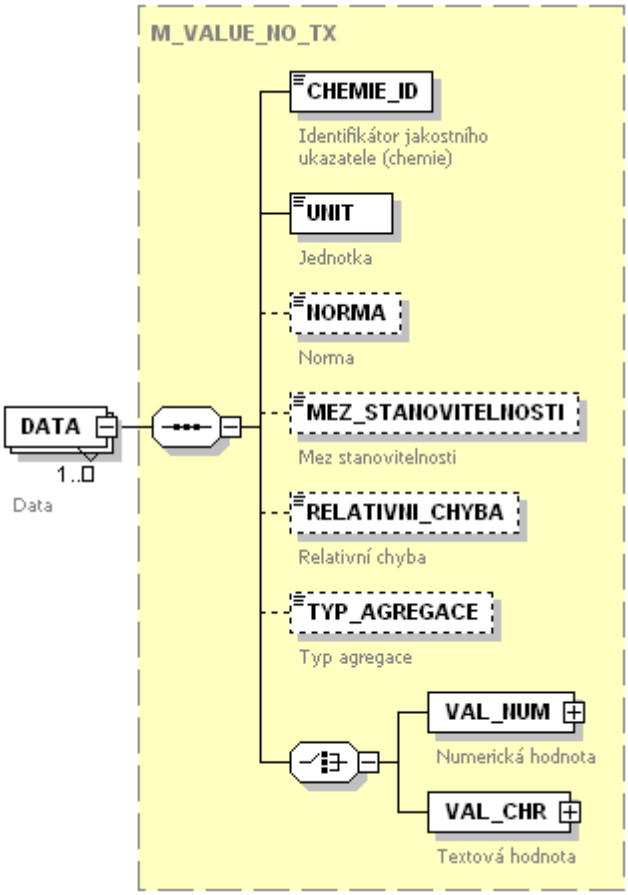

type **M_VALUE_NO_TX**

properties
isRef 0
minOcc 1
maxOcc unbounded
content complex

children **CHEMIE_ID** **UNIT** **NORMA** **MEZ_STANOVITELNOSTI** **RELATIVNI_CHYBA** **TYP_AGREGACE** **VAL_NUM** **VAL_CHR**

annotation
documentation
Data

complexType **M_VZOREK_NAROSTY**

diagram

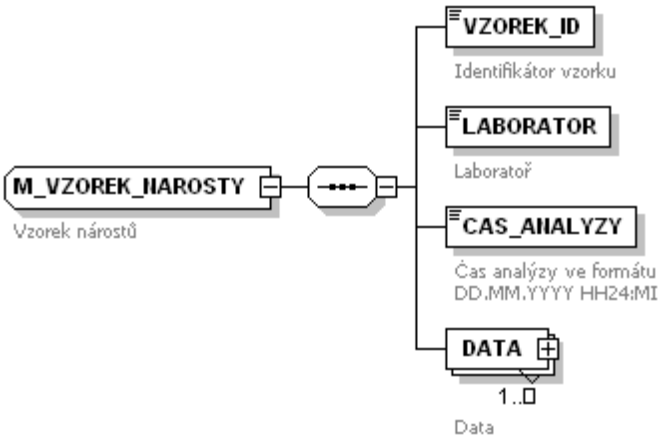

children **VZOREK_ID** **LABORATOR** **CAS_ANALYZY** **DATA**

used by
element **M_MATR/NAROSTY/VZOREK**

annotation
documentation
Vzorek nárostů

element **M_VZOREK_NAROSTY/VZOREK_ID**

diagram

type **S_VZOREK_ID**

properties
isRef 0
content simple

annotation
documentation
Identifikátor vzorku

element **M_VZOREK_NAROSTY/LABORATOR**

diagram

type **S_LABORATOR**

properties
isRef 0
content simple

annotation
documentation
Laboratoř

element **M_VZOREK_NAROSTY/CAS_ANALYZY**

diagram

type **S_CAS_ANALYZY**

properties
- isRef 0
- content simple

annotation
- documentation
  Čas analýzy ve formátu DD.MM.YYYY HH24:MI

element **M_VZOREK_NAROSTY/DATA**

diagram

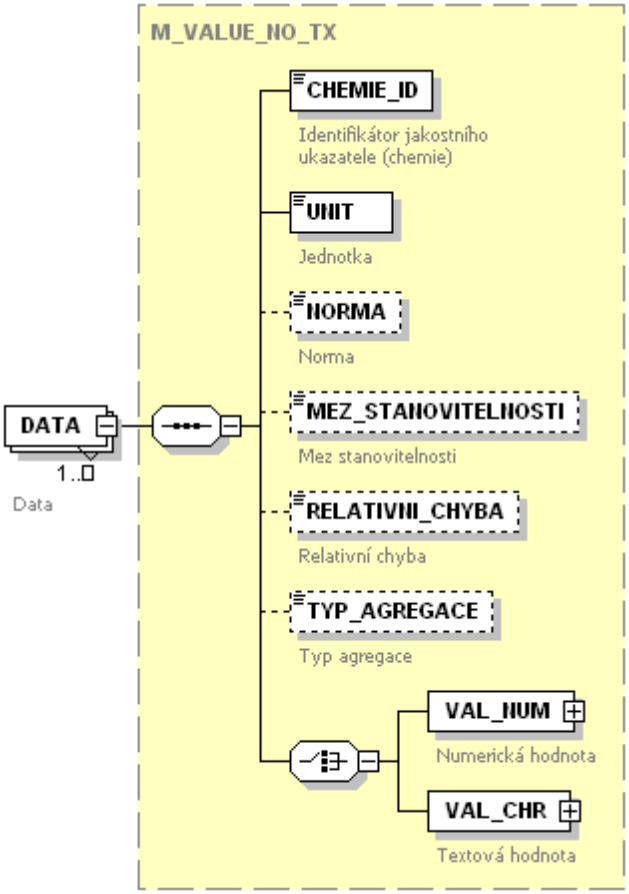

type **M_VALUE_NO_TX**

properties
- isRef 0
- minOcc 1
- maxOcc unbounded
- content complex

children **CHEMIE_ID** **UNIT** **NORMA** **MEZ_STANOVITELNOSTI** **RELATIVNI_CHYBA** **TYP_AGREGACE** **VAL_NUM** **VAL_CHR**

annotation
- documentation
  Data

complexType **M_VZOREK_PASIV_VZORKOVAC**

diagram

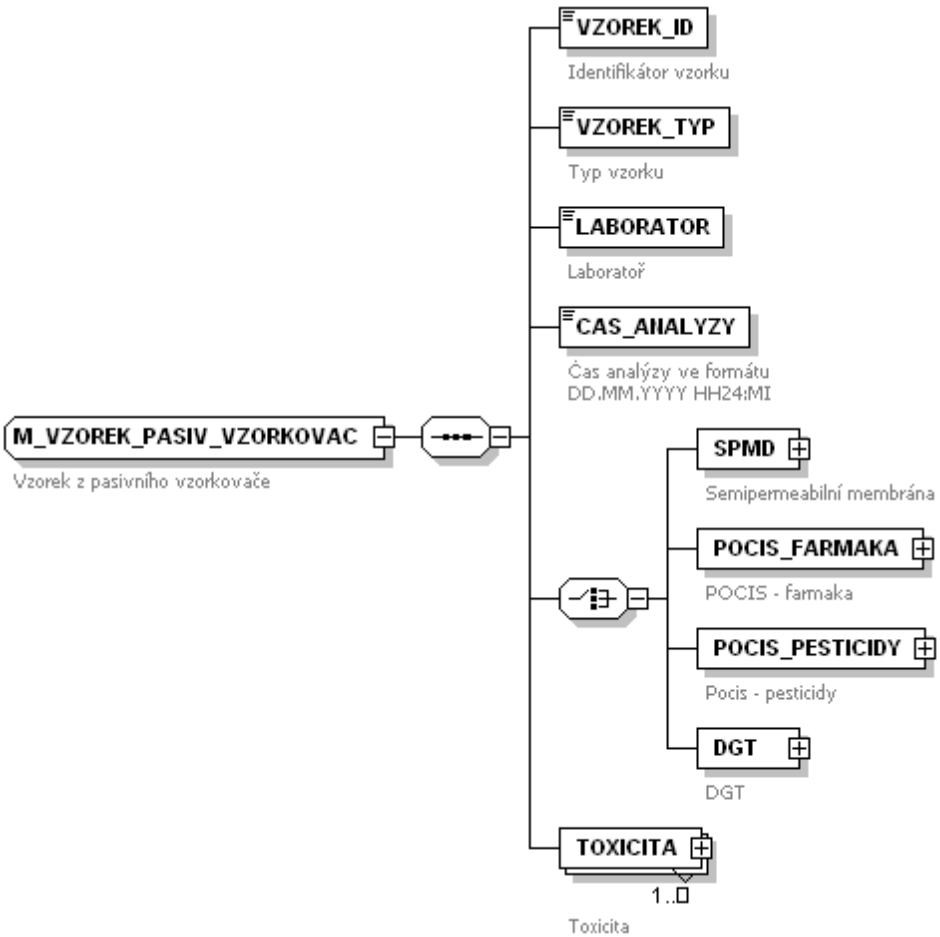

children **VZOREK_ID** **VZOREK_TYP** **LABORATOR** **CAS_ANALYZY** **SPMD** **POCIS_FARMAKA** **POCIS_PESTICIDY** **DGT** **TOXICITA**

used by element **M_MATR/PASIVNI_VZORKOVAC/VZOREK**

annotation documentation
Vzorek z pasivního vzorkovače

element **M_VZOREK_PASIV_VZORKOVAC/VZOREK_ID**

diagram

type **S_VZOREK_ID**

properties isRef 0
content simple

annotation documentation
Identifikátor vzorku

element **M_VZOREK_PASIV_VZORKOVAC/VZOREK_TYP**

diagram

type **xsd:string**

properties isRef 0
content simple
annotation documentation
Typ vzorku

element **M_VZOREK_PASIV_VZORKOVAC/LABORATOR**

diagram

type **S_LABORATOR**

properties isRef 0
content simple
annotation documentation
Laboratoř

element **M_VZOREK_PASIV_VZORKOVAC/CAS_ANALYZY**

diagram

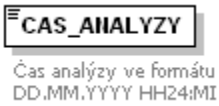

type **S_CAS_ANALYZY**

properties isRef 0
content simple
annotation documentation
Čas analýzy ve formátu DD.MM.YYYY HH24:MI

element **M_VZOREK_PASIV_VZORKOVAC/SPMD**

diagram

properties isRef 0
content complex
children **DATA**
annotation documentation
Semipermeabilní membrána

element **M_VZOREK_PASIV_VZORKOVAC/SPMD/DATA**

diagram

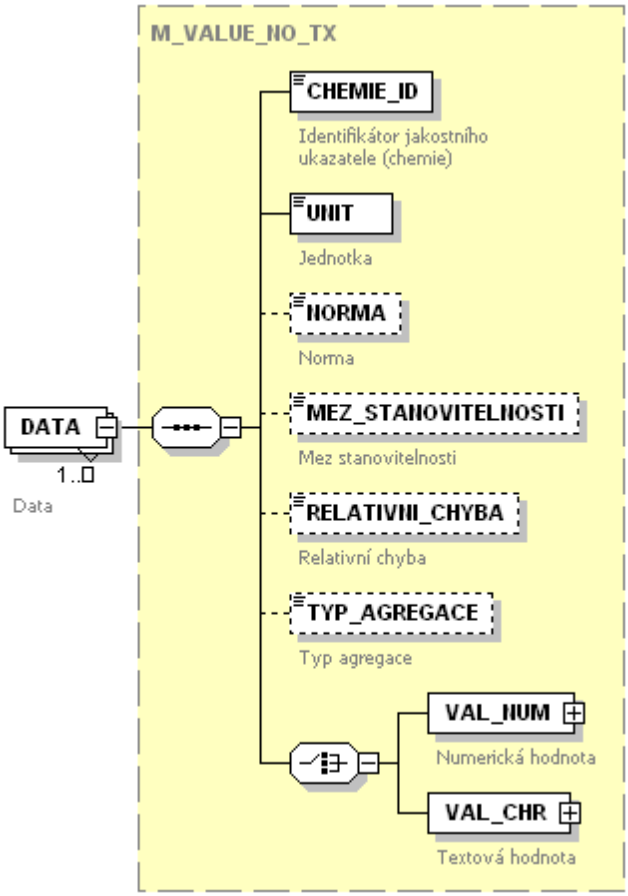

type **M_VALUE_NO_TX**

properties
- isRef 0
- minOcc 1
- maxOcc unbounded
- content complex

children **CHEMIE_ID** **UNIT** **NORMA** **MEZ_STANOVITELNOSTI** **RELATIVNI_CHYBA** **TYP_AGREGACE** **VAL_NUM** **VAL_CHR**

annotation
documentation
Data

element **M_VZOREK_PASIV_VZORKOVAC/POCIS_FARMAKA**

diagram

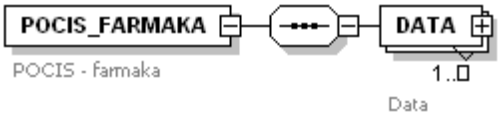

properties
- isRef 0
- content complex

children **DATA**

annotation
documentation
POCIS - farmaka

element **M_VZOREK_PASIV_VZORKOVAC/POCIS_FARMAKA/DATA**

diagram

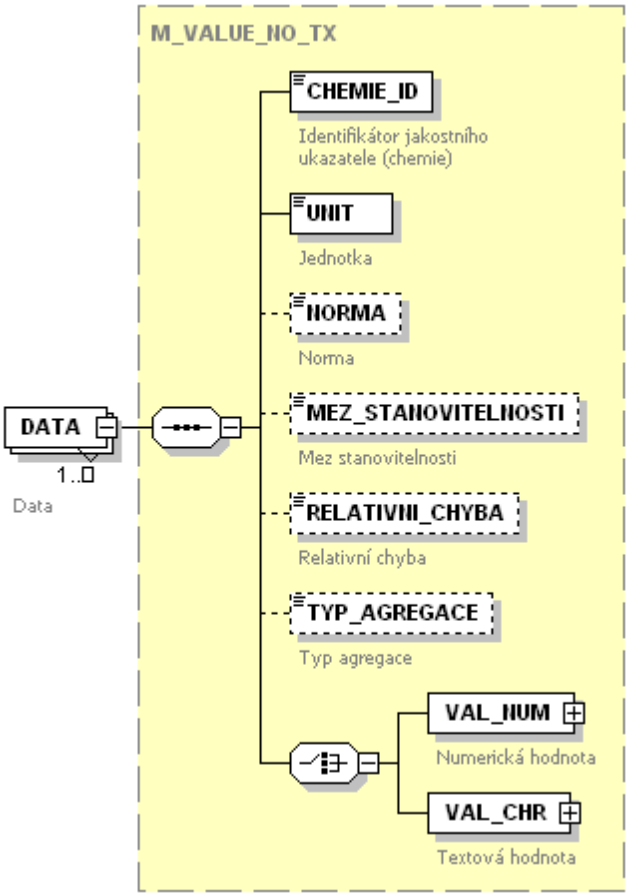

type **M_VALUE_NO_TX**

properties
- isRef 0
- minOcc 1
- maxOcc unbounded
- content complex

children **CHEMIE_ID** **UNIT** **NORMA** **MEZ_STANOVITELNOSTI** **RELATIVNI_CHYBA** **TYP_AGREGACE** **VAL_NUM** **VAL_CHR**

annotation
documentation
Data

element **M_VZOREK_PASIV_VZORKOVAC/POCIS_PESTICIDY**

diagram

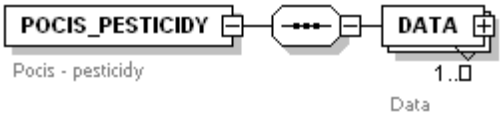

properties
- isRef 0
- content complex

children **DATA**

annotation
documentation
Pocis - pesticidy

element **M_VZOREK_PASIV_VZORKOVAC/POCIS_PESTICIDY/DATA**

diagram

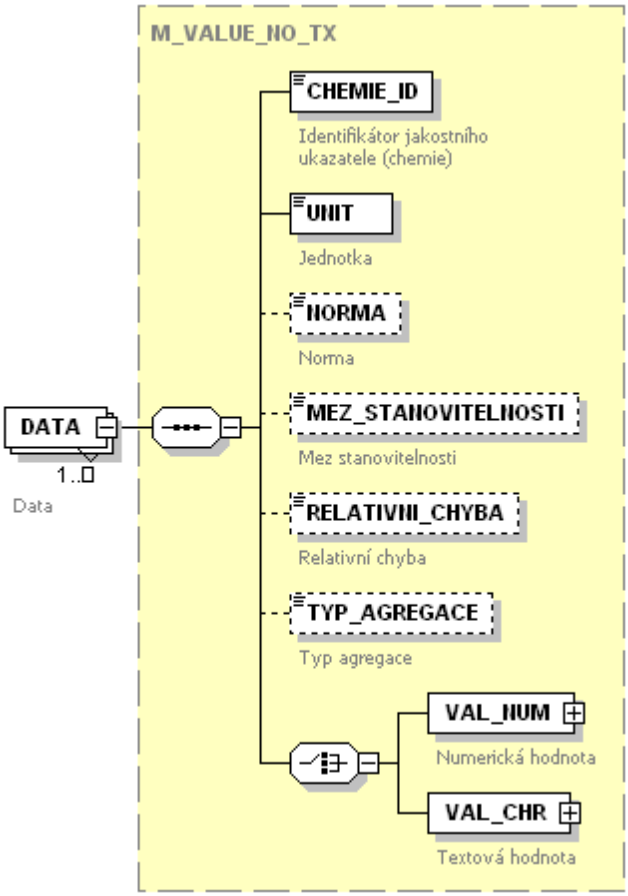

type **M_VALUE_NO_TX**

properties
- isRef 0
- minOcc 1
- maxOcc unbounded
- content complex

children **CHEMIE_ID** **UNIT** **NORMA** **MEZ_STANOVITELNOSTI** **RELATIVNI_CHYBA** **TYP_AGREGACE** **VAL_NUM** **VAL_CHR**

annotation
documentation
Data

element **M_VZOREK_PASIV_VZORKOVAC/DGT**

diagram

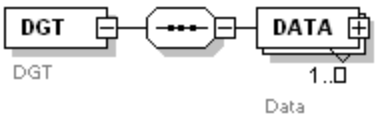

properties
- isRef 0
- content complex

children **DATA**

annotation
documentation
DGT

element **M_VZOREK_PASIV_VZORKOVAC/DGT/DATA**

diagram

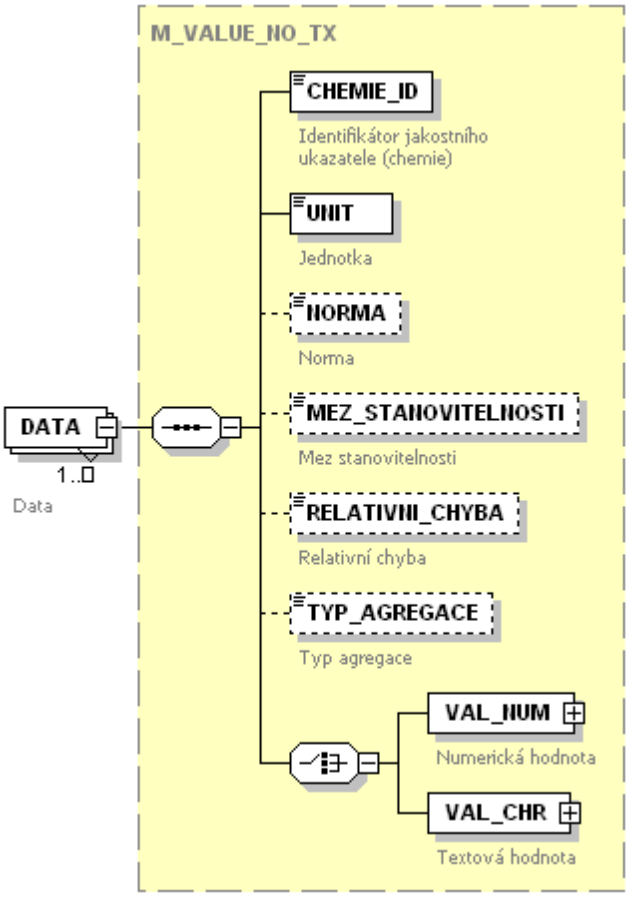

type **M_VALUE_NO_TX**

properties
- isRef 0
- minOcc 1
- maxOcc unbounded
- content complex

children **CHEMIE_ID** **UNIT** **NORMA** **MEZ_STANOVITELNOSTI** **RELATIVNI_CHYBA** **TYP_AGREGACE** **VAL_NUM** **VAL_CHR**

annotation
documentation
Data

element **M_VZOREK_PASIV_VZORKOVAC/TOXICITA**

diagram

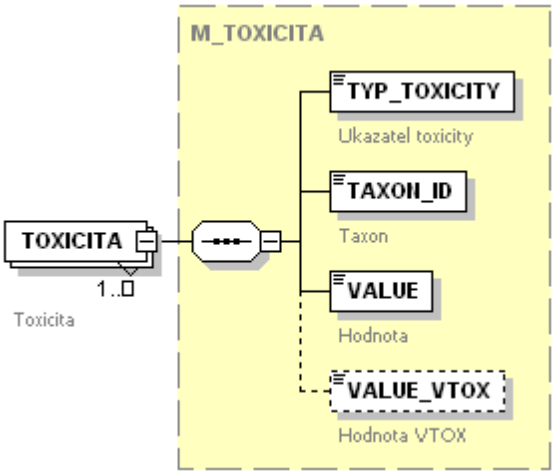

type **M_TOXICITA**

properties
isRef 0
minOcc 1
maxOcc unbounded
content complex

children **TYP_TOXICITY** **TAXON_ID** **VALUE** **VALUE_VTOX**

annotation
documentation
Toxicita

complexType **M_VZOREK_PLAVENINY**

diagram

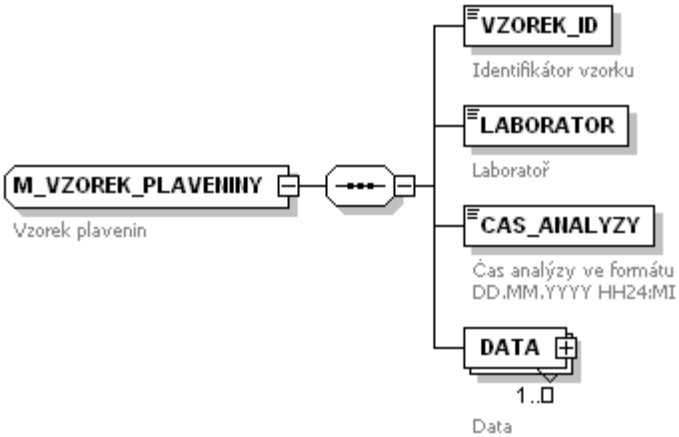

children **VZOREK_ID** **LABORATOR** **CAS_ANALYZY** **DATA**

used by
elements **M_MATR/PLAVENINY/VZOREK** **M_MATR/SEDIMENTOVATELNE_PLAVENINY/VZOREK**

annotation
documentation
Vzorek plavenin

element **M_VZOREK_PLAVENINY/VZOREK_ID**

diagram

type **S_VZOREK_ID**

properties
isRef 0
content simple

annotation
documentation
Identifikátor vzorku

element **M_VZOREK_PLAVENINY/LABORATOR**

diagram

type **S_LABORATOR**

properties
isRef 0
content simple

annotation
documentation
Laboratoř

element **M_VZOREK_PLAVENINY/CAS_ANALYZY**

diagram

type **S_CAS_ANALYZY**

properties
- isRef 0
- content simple

annotation
- documentation
  Čas analýzy ve formátu DD.MM.YYYY HH24:MI

element **M_VZOREK_PLAVENINY/DATA**

diagram

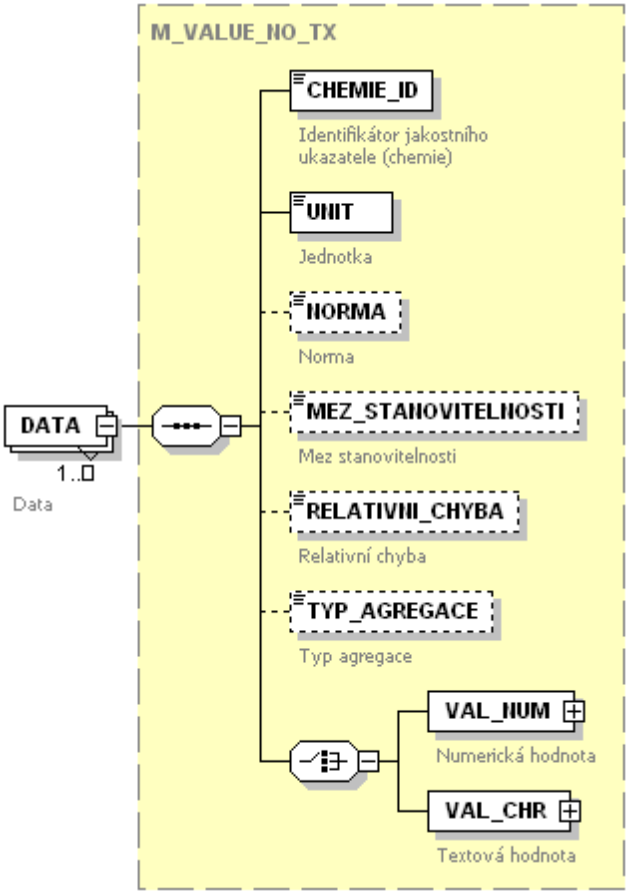

type **M_VALUE_NO_TX**

properties
- isRef 0
- minOcc 1
- maxOcc unbounded
- content complex

children **CHEMIE_ID** **UNIT** **NORMA** **MEZ_STANOVITELNOSTI** **RELATIVNI_CHYBA** **TYP_AGREGACE** **VAL_NUM** **VAL_CHR**

annotation
- documentation
  Data

complexType **M_VZOREK_RYBA**

diagram

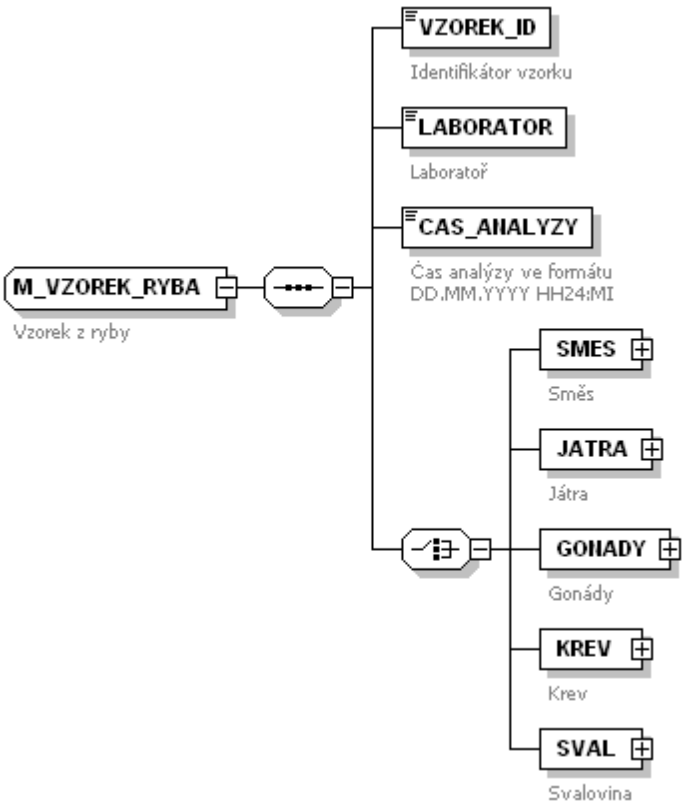

children **VZOREK_ID** **LABORATOR** **CAS_ANALYZY** **SMES** **JATRA** **GONADY** **KREV** **SVAL**

used by element **M_ODB_RYBA/RYBA/VZOREK**

annotation documentation
Vzorek z ryby

element **M_VZOREK_RYBA/VZOREK_ID**

diagram

type **S_VZOREK_ID**

properties isRef 0
content simple

annotation documentation
Identifikátor vzorku

element **M_VZOREK_RYBA/LABORATOR**

diagram

type **S_LABORATOR**

properties isRef 0
content simple

annotation documentation
Laboratoř

element **M_VZOREK_RYBA/CAS_ANALYZY**

diagram

type **S_CAS_ANALYZY**

properties
isRef 0
content simple

annotation
documentation
Čas analýzy ve formátu DD.MM.YYYY HH24:MI

element **M_VZOREK_RYBA/SMES**

diagram

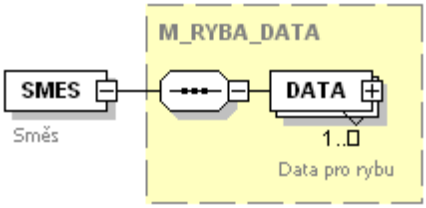

type **M_RYBA_DATA**

properties
isRef 0
content complex

children **DATA**

annotation
documentation
Směs

element **M_VZOREK_RYBA/JATRA**

diagram

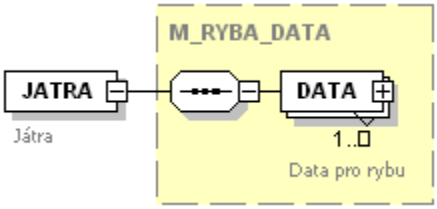

type **M_RYBA_DATA**

properties
isRef 0
content complex

children **DATA**

annotation
documentation
Játra

element **M_VZOREK_RYBA/GONADY**

diagram

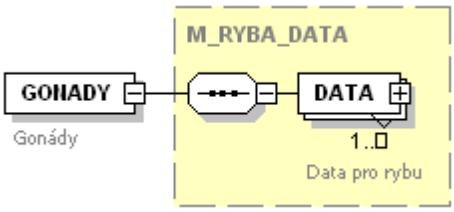

type **M_RYBA_DATA**

properties
isRef 0
content complex

children **DATA**

annotation documentation
Gonády

element **M_VZOREK_RYBA/KREV**

diagram

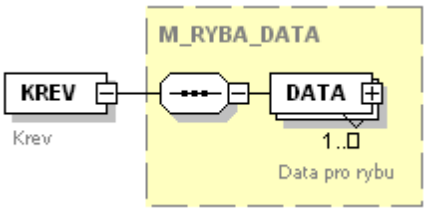

type **M_RYBA_DATA**

properties isRef 0
content complex

children **DATA**

annotation documentation
Krev

element **M_VZOREK_RYBA/SVAL**

diagram

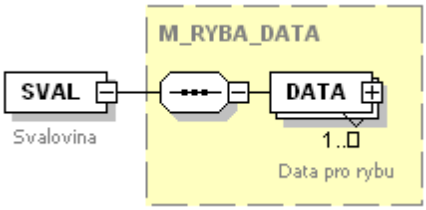

type **M_RYBA_DATA**

properties isRef 0
content complex

children **DATA**

annotation documentation
Svalovina

complexType **M_VZOREK_RYBA_PLUDEK**

diagram

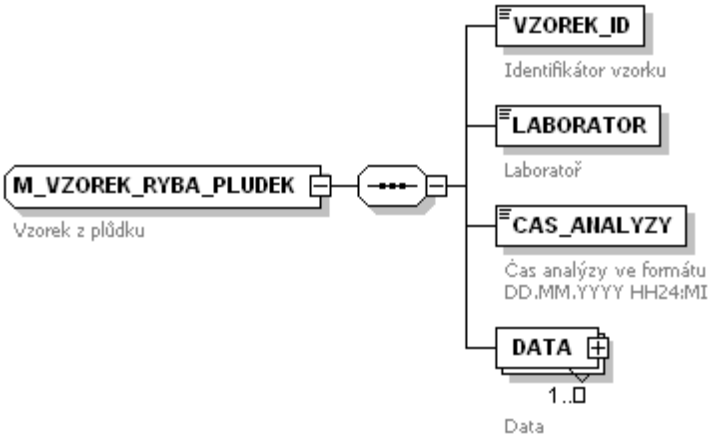

children **VZOREK_ID** **LABORATOR** **CAS_ANALYZY** **DATA**

used by element **M_MATR/RYBA_PLUDEK/VZOREK**

annotation documentation
Vzorek z plůdku

element **M_VZOREK_RYBA_PLUDEK/VZOREK_ID**

diagram

type **S_VZOREK_ID**

properties
isRef 0
content simple

annotation
documentation
Identifikátor vzorku

element **M_VZOREK_RYBA_PLUDEK/LABORATOR**

diagram

type **S_LABORATOR**

properties
isRef 0
content simple

annotation
documentation
Laboratoř

element **M_VZOREK_RYBA_PLUDEK/CAS_ANALYZY**

diagram

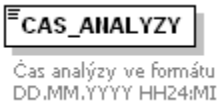

type **S_CAS_ANALYZY**

properties
isRef 0
content simple

annotation
documentation
Čas analýzy ve formátu DD.MM.YYYY HH24:MI

element **M_VZOREK_RYBA_PLUDEK/DATA**

diagram

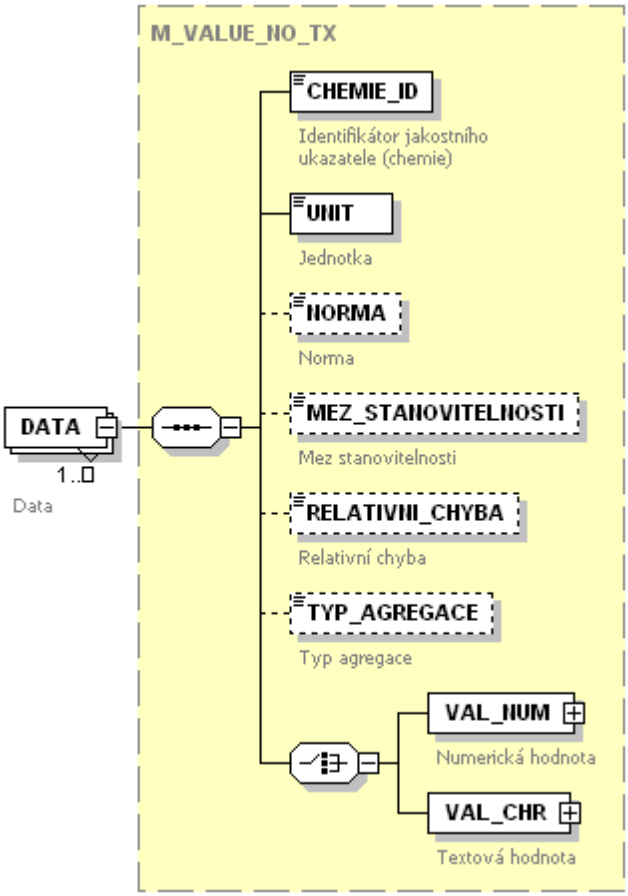

type **M_VALUE_NO_TX**

properties
- isRef 0
- minOcc 1
- maxOcc unbounded
- content complex

children **CHEMIE_ID** **UNIT** **NORMA** **MEZ_STANOVITELNOSTI** **RELATIVNI_CHYBA** **TYP_AGREGACE** **VAL_NUM** **VAL_CHR**

annotation
documentation
Data

complexType **M_VZOREK_SEDIMENTY**

diagram

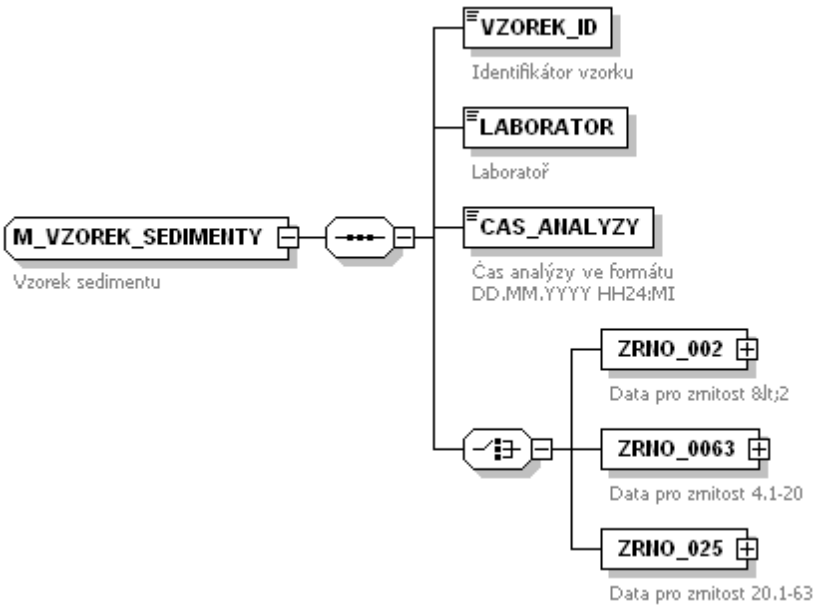

children **VZOREK_ID** **LABORATOR** **CAS_ANALYZY** **ZRNO_002** **ZRNO_0063** **ZRNO_025**

used by element **M_MATR/SEDIMENTY/VZOREK**

annotation documentation
Vzorek sedimentu

element **M_VZOREK_SEDIMENTY/VZOREK_ID**

diagram

type **S_VZOREK_ID**

properties isRef 0
content simple

annotation documentation
Identifikátor vzorku

element **M_VZOREK_SEDIMENTY/LABORATOR**

diagram

type **S_LABORATOR**

properties isRef 0
content simple

annotation documentation
Laboratoř

element **M_VZOREK_SEDIMENTY/CAS_ANALYZY**

diagram

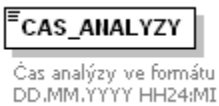

type **S_CAS_ANALYZY**

properties isRef 0
content simple
annotation documentation
Čas analýzy ve formátu DD.MM.YYYY HH24:MI

element **M_VZOREK_SEDIMENTY/ZRNO_002**

diagram

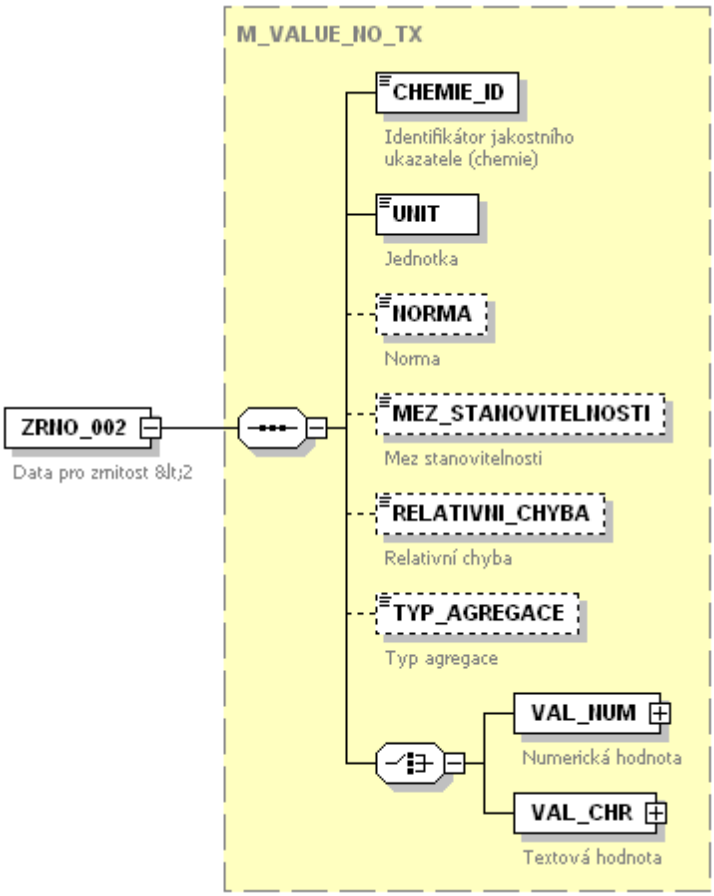

type **M_VALUE_NO_TX**

properties isRef 0
content complex

children **CHEMIE_ID** **UNIT** **NORMA** **MEZ_STANOVITELNOSTI** **RELATIVNI_CHYBA** **TYP_AGREGACE** **VAL_NUM** **VAL_CHR**

annotation documentation
Data pro zrnitost <2

element **M_VZOREK_SEDIMENTY/ZRNO_0063**

diagram

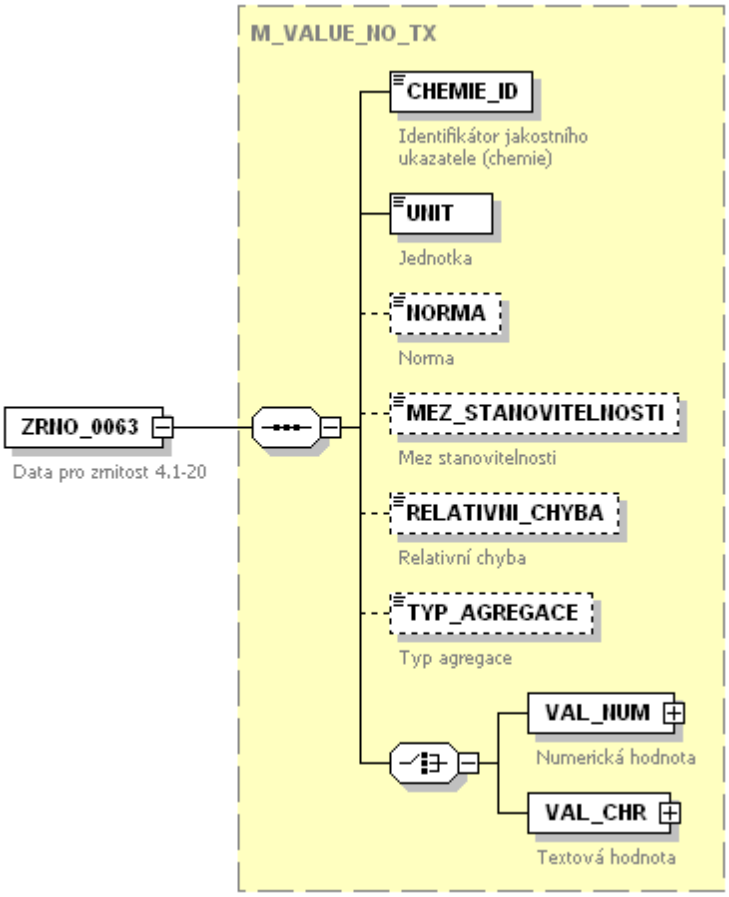

type **M_VALUE_NO_TX**

properties
isRef 0
content complex

children **CHEMIE_ID** **UNIT** **NORMA** **MEZ_STANOVITELNOSTI** **RELATIVNI_CHYBA** **TYP_AGREGACE** **VAL_NUM** **VAL_CHR**

annotation
documentation
Data pro zrnitost 4.1-20

element **M_VZOREK_SEDIMENTY/ZRNO_025**

diagram

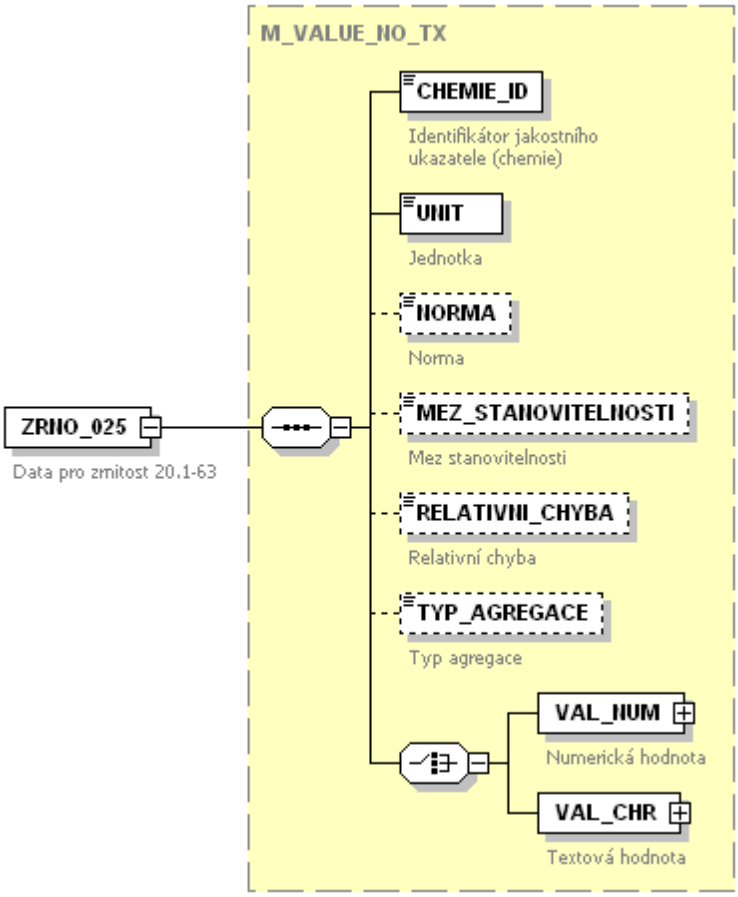

type **M_VALUE_NO_TX**

properties
isRef 0
content complex

children **CHEMIE_ID** **UNIT** **NORMA** **MEZ_STANOVITELNOSTI** **RELATIVNI_CHYBA** **TYP_AGREGACE** **VAL_NUM** **VAL_CHR**

annotation
documentation
Data pro zrnitost 20.1-63

complexType **M_VZOREK_VODA**

diagram

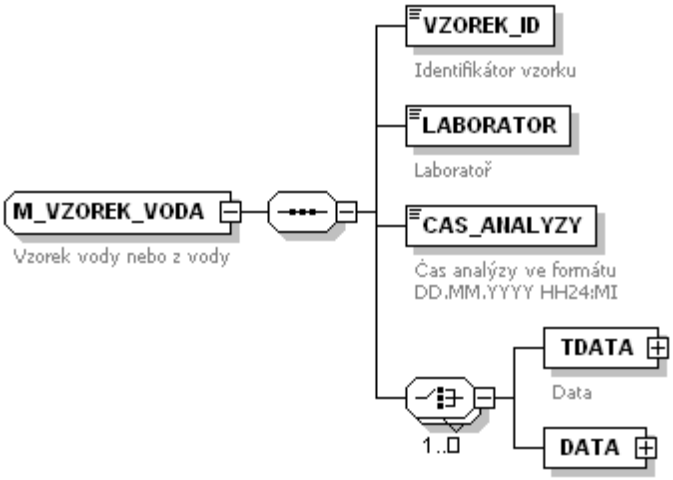

children **VZOREK_ID** **LABORATOR** **CAS_ANALYZY** **TDATA** **DATA**

used by element **M_MATR/VODA/VZOREK**

annotation documentation
Vzorek vody nebo z vody

element **M_VZOREK_VODA/VZOREK_ID**

diagram

type **S_VZOREK_ID**

properties isRef 0
content simple

annotation documentation
Identifikátor vzorku

element **M_VZOREK_VODA/LABORATOR**

diagram

type **S_LABORATOR**

properties isRef 0
content simple

annotation documentation
Laboratoř

element **M_VZOREK_VODA/CAS_ANALYZY**

diagram

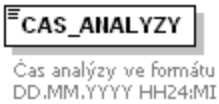

type **S_CAS_ANALYZY**

properties isRef 0
content simple

annotation documentation
Čas analýzy ve formátu DD.MM.YYYY HH24:MI

element **M_VZOREK_VODA/TDATA**

diagram

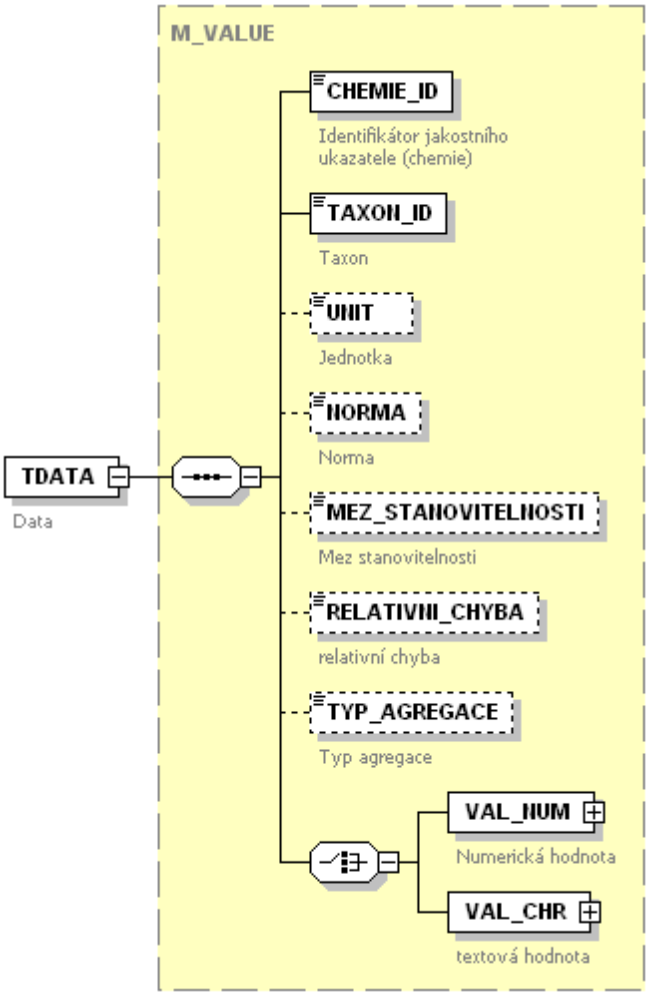

type **M_VALUE**

properties
isRef 0
content complex

children **CHEMIE_ID** **TAXON_ID** **UNIT** **NORMA** **MEZ_STANOVITELNOSTI** **RELATIVNI_CHYBA** **TYP_AGREGACE** **VAL_NUM** **VAL_CHR**

annotation
documentation
Data

element **M_VZOREK_VODA/DATA**

diagram

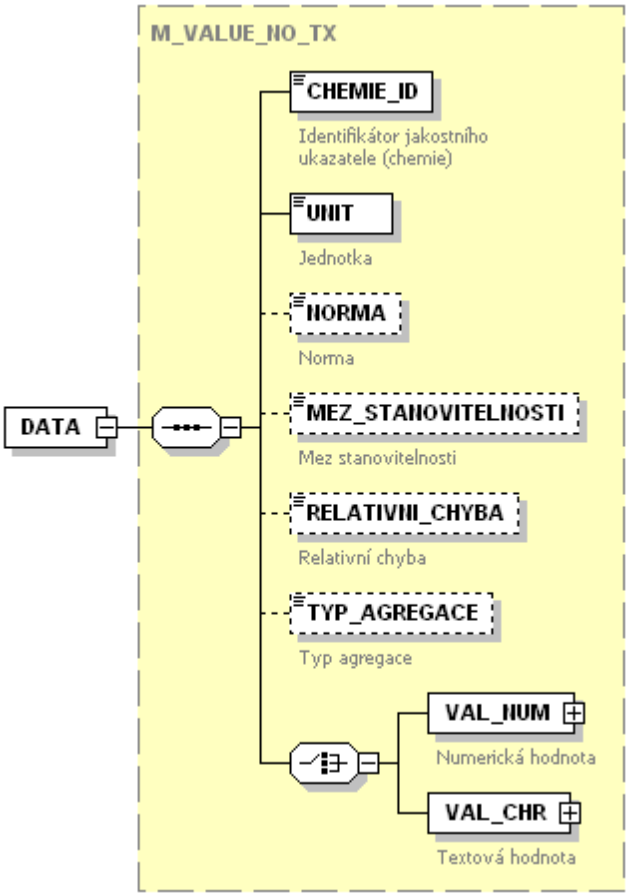

type **M_VALUE_NO_TX**

properties
isRef 0
content complex

children **CHEMIE_ID** **UNIT** **NORMA** **MEZ_STANOVITELNOSTI** **RELATIVNI_CHYBA** **TYP_AGREGACE** **VAL_NUM** **VAL_CHR**

complexType **M_ZRNITOST**

diagram

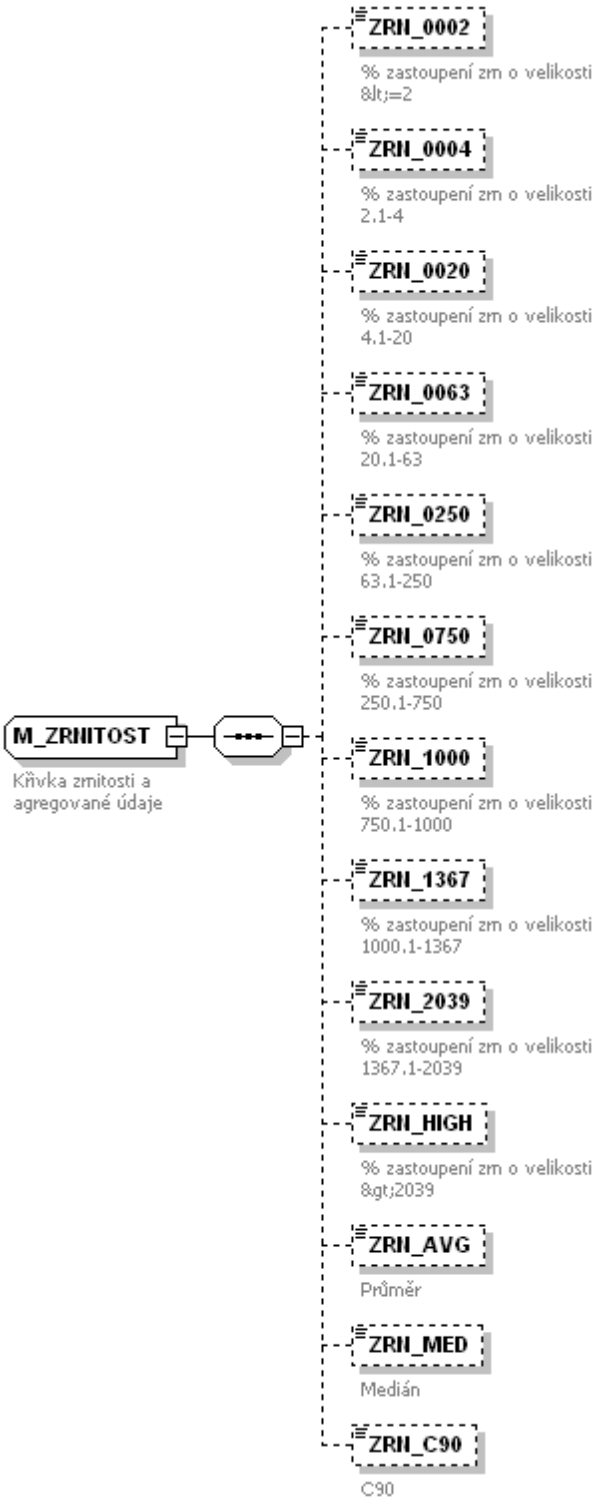

children **ZRN_0002** **ZRN_0004** **ZRN_0020** **ZRN_0063** **ZRN_0250** **ZRN_0750** **ZRN_1000** **ZRN_1367** **ZRN_2039** **ZRN_HIGH** **ZRN_AVG** **ZRN_MED** **ZRN_C90**

used by elements **M_MATR/PLAVENINY/ZRNITOST** **M_MATR/SEDIMENTOVATELNE_PLAVENINY/ZRNITOST** **M_MATR/SEDIMENTY/ZRNITOST**

annotation documentation

Křivka zrnitosti a agregované údaje

element **M_ZRNITOST/ZRN_0002**

diagram

type restriction of **xsd:float**

properties
- isRef 0
- minOcc 0
- maxOcc 1
- content simple

facets
- minInclusive 0
- maxInclusive 100

annotation
documentation
% zastoupení zrn o velikosti <=2

element **M_ZRNITOST/ZRN_0004**

diagram

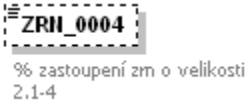

type restriction of **xsd:float**

properties
- isRef 0
- minOcc 0
- maxOcc 1
- content simple

facets
- minInclusive 0
- maxInclusive 100

annotation
documentation
% zastoupení zrn o velikosti 2.1-4

element **M_ZRNITOST/ZRN_0020**

diagram

type restriction of **xsd:float**

properties
- isRef 0
- minOcc 0
- maxOcc 1
- content simple

facets
- minInclusive 0
- maxInclusive 100

annotation
documentation
% zastoupení zrn o velikosti 4.1-20

element **M_ZRNITOST/ZRN_0063**

diagram

type restriction of **xsd:float**

properties
- isRef 0
- minOcc 0
- maxOcc 1
- content simple

facets
- minInclusive 0
- maxInclusive 100

annotation documentation
% zastoupení zrn o velikosti 20.1-63

element **M_ZRNITOST/ZRN_0250**

diagram

type restriction of **xsd:float**

properties
isRef 0
minOcc 0
maxOcc 1
content simple

facets
minInclusive 0
maxInclusive 100

annotation documentation
% zastoupení zrn o velikosti 63.1-250

element **M_ZRNITOST/ZRN_0750**

diagram

type restriction of **xsd:float**

properties
isRef 0
minOcc 0
maxOcc 1
content simple

facets
minInclusive 0
maxInclusive 100

annotation documentation
% zastoupení zrn o velikosti 250.1-750

element **M_ZRNITOST/ZRN_1000**

diagram

type restriction of **xsd:float**

properties
isRef 0
minOcc 0
maxOcc 1
content simple

facets
minInclusive 0
maxInclusive 100

annotation documentation
% zastoupení zrn o velikosti 750.1-1000

element **M_ZRNITOST/ZRN_1367**

diagram

type restriction of **xsd:float**

properties
isRef 0
minOcc 0
maxOcc 1
content simple

facets
minInclusive 0
maxInclusive 100

annotation
documentation
% zastoupení zrn o velikosti 1000.1-1367

element **M_ZRNITOST/ZRN_2039**

diagram

type restriction of **xsd:float**

properties
isRef 0
minOcc 0
maxOcc 1
content simple

facets
minInclusive 0
maxInclusive 100

annotation
documentation
% zastoupení zrn o velikosti 1367.1-2039

element **M_ZRNITOST/ZRN_HIGH**

diagram

type restriction of **xsd:float**

properties
isRef 0
minOcc 0
maxOcc 1
content simple

facets
minInclusive 0
maxInclusive 100

annotation
documentation
% zastoupení zrn o velikosti >2039

element **M_ZRNITOST/ZRN_AVG**

diagram

type **xsd:float**

properties
isRef 0
minOcc 0
maxOcc 1
content simple

annotation
documentation
Průměr

element **M_ZRNITOST/ZRN_MED**

diagram

type **xsd:float**

properties
isRef 0
minOcc 0
maxOcc 1
content simple

annotation
documentation
Medián

element **M_ZRNITOST/ZRN_C90**

diagram

type **xsd:float**

properties

isRef	0
minOcc	0
maxOcc	1
content	simple

annotation

documentation

C90

complexType **VAL_ITEM**

diagram

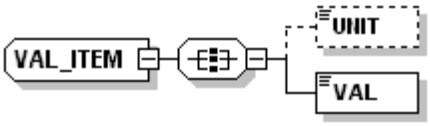

children **UNIT** **VAL**

element **VAL_ITEM/UNIT**

diagram

type **xsd:string**

properties

isRef	0
minOcc	0
maxOcc	1
content	simple
nillable	true

element **VAL_ITEM/VAL**

diagram

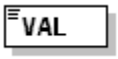

properties

isRef	0

complexType **VAL_ITEM_FLOAT**

diagram

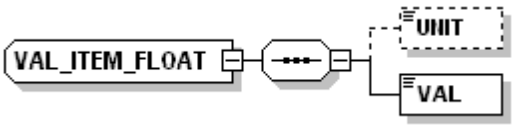

children **UNIT** **VAL**

used by

elements **AGENDA/OBJEKT/BODBER/FCHEM_UK/TEPL_VODA**
AGENDA/OBJEKT/BODBER/FCHEM_UK/TEPL_VZDUCH

element **VAL_ITEM_FLOAT/UNIT**

diagram

type **xsd:string**

properties
isRef 0
minOcc 0
maxOcc 1
content simple
nillable true

element **VAL_ITEM_FLOAT/VAL**

diagram

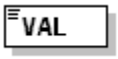

type **xsd:float**

properties
isRef 0
content simple

complexType **VAL_ITEM_NPOSITIVE**

diagram

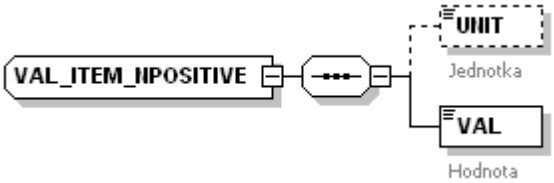

children **UNIT** **VAL**

used by
elements **AGENDA/OBJEKT/BODBER/FCHEM_UK/NAS_KYSLIK** **AGENDA/OBJEKT/BODBER/FCHEM_UK/PH**
AGENDA/OBJEKT/BODBER/FCHEM_UK/ROZP_KYSLIK
AGENDA/OBJEKT/BODBER/PROFIL_USEK/SOUR_DK_GPS/SOUR_DK_GPS_PREC
AGENDA/OBJEKT/BODBER/PROFIL_USEK/SOUR_HK_GPS/SOUR_HK_GPS_PREC
AGENDA/OBJEKT/BODBER/FCHEM_UK/VODIVOST

element **VAL_ITEM_NPOSITIVE/UNIT**

diagram

type **xsd:string**

properties
isRef 0
minOcc 0
maxOcc 1
content simple
nillable true

annotation
documentation
Jednotka

element **VAL_ITEM_NPOSITIVE/VAL**

diagram

type **VAL_NUM_POSITIVE**

properties
isRef 0
content simple

facets
minInclusive 0

annotation
documentation
Hodnota

complexType **VAL_ITEM_PROC**

diagram

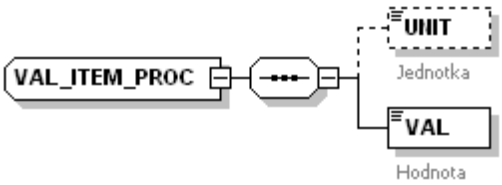

children **UNIT** **VAL**

element **VAL_ITEM_PROC/UNIT**

diagram

type **xsd:string**

properties
- isRef 0
- minOcc 0
- maxOcc 1
- content simple
- nillable true

annotation
- documentation
  Jednotka

element **VAL_ITEM_PROC/VAL**

diagram

type **VAL_PROC**

properties
- isRef 0
- content simple

facets
- minInclusive 0
- maxInclusive 100

annotation
- documentation
  Hodnota

complexType **VAL_SMPL_PINUM**

diagram

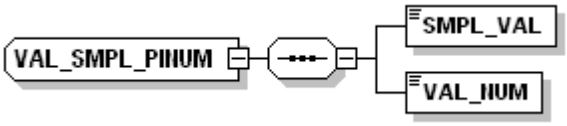

children **SMPL_VAL** **VAL_NUM**

element **VAL_SMPL_PINUM/SMPL_VAL**

diagram

properties
- isRef 0

element **VAL_SMPL_PINUM/VAL_NUM**

diagram

type restriction of **xsd:positiveInteger**

properties
isRef 0
content simple

complexType **VAL_SMPL_PNUM**

diagram

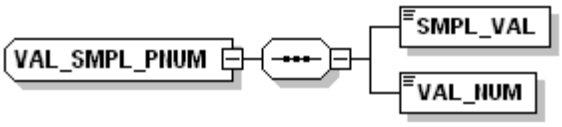

children SMPL_VAL VAL_NUM

element **VAL_SMPL_PNUM/SMPL_VAL**

diagram

properties isRef 0

element **VAL_SMPL_PNUM/VAL_NUM**

diagram

type restriction of VAL_NUM_POSITIVE

properties
isRef 0
content simple

facets
minInclusive 0

complexType **VAL_SMPL_PROC**

diagram

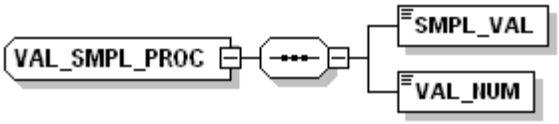

children SMPL_VAL VAL_NUM

element **VAL_SMPL_PROC/SMPL_VAL**

diagram

properties isRef 0

element **VAL_SMPL_PROC/VAL_NUM**

diagram

type restriction of VAL_PROC

properties
isRef 0
content simple

facets
minInclusive 0
maxInclusive 100

simpleType **AGENDA_ID**

type restriction of **xsd:string**

used by
element **AGENDA/AGENDA_ID**

facets
enumeration POV
enumeration PZV
enumeration UZ

annotation
documentation
Číselník agend

simpleType **ANO_NE_SMPL**

type restriction of **xsd:string**

used by
elements **AGENDA/OBJEKT/BODBER/BVZOREK/BHODNOTA/CF**
AGENDA/OBJEKT/BODBER/BVZOREK/BHODNOTA/JUV
AGENDA/OBJEKT/BODBER/CHAR_USEK/BREH_UPRAVA/SMER_UPRAVA
AGENDA/OBJEKT/BODBER/CHAR_USEK/DNO/NANOSY/SMPL_VAL
AGENDA/OBJEKT/BODBER/BVZOREK/BHODNOTA/HODNOTA/TEREN_DETER
AGENDA/OBJEKT/BODBER/CHAR_USEK/DNO/UPRAVA_NARUSENA
AGENDA/OBJEKT/BODBER/CHAR_USEK/VODNI_KVET_SEQ

facets
enumeration 1
enumeration 0

annotation
documentation
ano / ne

simpleType **B_TSCON_SMPL**

type restriction of **xsd:string**

used by
element **AGENDA/OBJEKT/BODBER/BVZOREK/BHODNOTA/TSCON_SEQ**

facets
enumeration POCET
enumeration POKRYV
enumeration STUPEN

annotation
documentation
Typ hodnoty

simpleType **BARVA_SMPL**

type restriction of **xsd:string**

used by
element **AGENDA/OBJEKT/BODBER/PROFIL_USEK/BARVA/BARVA_SEQ**

facets
enumeration 1
enumeration 2
enumeration 3
enumeration 4
enumeration 5

annotation
documentation
Zbarvení vody

simpleType **BREH_50_SMPL**

type restriction of **xsd:string**

used by
elements **AGENDA/OBJEKT/BODBER/CHAR_USEK/BREH_50M/LB/UPRAVA**
AGENDA/OBJEKT/BODBER/CHAR_USEK/BREH_50M/PB/UPRAVA

facets
enumeration 1
enumeration 2
enumeration 3
enumeration 4
enumeration 5
enumeration 6
enumeration 7
enumeration 8

enumeration 9
enumeration 10
enumeration 11
enumeration 12
enumeration 13
enumeration 14
enumeration 15
enumeration 16
enumeration 17
enumeration 18

annotation
documentation
do 50 m od břehu

simpleType **BREH_HRANA_SMPL**

type restriction of **xsd:string**

used by
elements **AGENDA/OBJEKT/BODBER/CHAR_USEK/BREH_HRANA/LB/VEGETACE**
AGENDA/OBJEKT/BODBER/CHAR_USEK/BREH_HRANA/PB/VEGETACE

facets
enumeration 1
enumeration 2
enumeration 3
enumeration 4
enumeration 5
enumeration 6
enumeration 7
enumeration 8
enumeration 9
enumeration 10
enumeration 11

annotation
documentation
břehová hrana

simpleType **BREH_SMER_UPRAVA_SMPL**

type restriction of **xsd:string**

facets
enumeration 1

annotation
documentation
směrová úprava toku

simpleType **BREH_UPRAVA_SMPL**

type restriction of **xsd:string**

used by
elements **AGENDA/OBJEKT/BODBER/CHAR_USEK/BREH_UPRAVA/LB/SMPL_VAL**
AGENDA/OBJEKT/BODBER/CHAR_USEK/BREH_UPRAVA/PB/SMPL_VAL

facets
enumeration 1
enumeration 2
enumeration 3
enumeration 4
enumeration 5
enumeration 6
enumeration 7
enumeration 8
enumeration 9
enumeration 10
enumeration 11
enumeration 12
enumeration 13
enumeration 14

annotation
documentation
úprava břehu

simpleType **CERPADLO_TYP**

type restriction of **xsd:string**

used by
element **M_TYP_ODB/CERPANY/CERPADLO**

facets
enumeration OBEHOVE
enumeration VIBRACNI
enumeration SACI

enumeration VZORKOVAC

annotation documentation
Číselník typů čerpadel

simpleType **DNO_POKRYVNOST_SMPL**

type restriction of **xsd:string**

used by element **AGENDA/OBJEKT/BODBER/CHAR_USEK/DNO/POKRYVNOST/SMPL_VAL**

facets enumeration 1
enumeration 2
enumeration 3

annotation documentation
pokryvnost dna vegetací

simpleType **DNO_STABILITA_SMPL**

type restriction of **xsd:string**

used by element **AGENDA/OBJEKT/BODBER/CHAR_USEK/DNO/STABILITA/SMPL_VAL**

facets enumeration 1
enumeration 2
enumeration 3
enumeration 4

annotation documentation
stabilita dna

simpleType **DNO_UPRAVA_NANOS_SMPL**

type restriction of **xsd:string**

facets enumeration 1

annotation documentation
úprava dna překryta nánosy

simpleType **DNO_UPRAVA_SMPL**

type restriction of **xsd:string**

used by element **AGENDA/OBJEKT/BODBER/CHAR_USEK/DNO/UPRAVA/SMPL_VAL**

facets enumeration 1
enumeration 2
enumeration 3
enumeration 4
enumeration 5
enumeration 6
enumeration 7

annotation documentation
úprava dna

simpleType **DNO_VIDITELNOST_SMPL**

type restriction of **xsd:string**

used by element **AGENDA/OBJEKT/BODBER/PROFIL_USEK/DNO_VIDITELNOST_SEQ**

facets enumeration 1
enumeration 2
enumeration 3

annotation documentation
viditelnost dna

simpleType **DREVO_SMPL**

type restriction of **xsd:string**

facets enumeration 1
enumeration 2
enumeration 3

annotation documentation
dřevo

simpleType **FYTOBENTOS_SMPL**

type restriction of **xsd:string**

used by element **AGENDA/OBJEKT/BODBER/FYTOBENTOS/FYTOBENTOS_SEQ**

facets
enumeration 1
enumeration 2
enumeration 3
enumeration 4

annotation documentation
fytobentos

simpleType **JISTOTA_SMPL**

type restriction of **xsd:string**

used by element **AGENDA/OBJEKT/BODBER/BVZOREK/JISTOTA_SEQ**

facets
enumeration 1
enumeration 2
enumeration 3

annotation documentation
Míra jistoty

simpleType **KVET_SMPL**

type restriction of **xsd:string**

facets
enumeration 1
enumeration 2

annotation documentation
vodní květ

simpleType **LAND_USE_SMPL**

type restriction of **xsd:string**

facets
enumeration 1
enumeration 2
enumeration 3
enumeration 4

annotation documentation
typ krajiny

simpleType **LEDOVY_JEV**

type restriction of **xsd:string**

used by element **AGENDA/OBJEKT/ODBER/LEDOVE_JEVY/LEDOVY_JEV**

facets
enumeration OK
enumeration LEDOVA_TRIST
enumeration TRIST_LED_BREH
enumeration LED_BREH
enumeration ZAMRZ
enumeration ZACPA
enumeration CHOD_LEDU
enumeration VODA_NA_LEDU

annotation documentation
Číselník ledových jevů

simpleType **MB_TEREN_SMPL**

type restriction of **xsd:string**

used by element **AGENDA/OBJEKT/BODBER/MB_TEREN/SMPL_VAL**

facets
enumeration 1
enumeration 2

enumeration 3
enumeration 4
enumeration 5
enumeration 6
enumeration 7
enumeration 8
enumeration 9
enumeration 10
enumeration 11
enumeration 12
enumeration 13
enumeration 14
enumeration 15
enumeration 16

annotation
documentation
p?ehled zkumavek a vzorkovnic

simpleType **MESOHABITAT_SMPL**

type restriction of **xsd:string**

used by
elements **AGENDA/OBJEKT/BODBER/RYBY/DREVO/DREVO_SEQ**
AGENDA/OBJEKT/BODBER/RYBY/MESOHABITAT/MESOHABITAT_SEQ
AGENDA/OBJEKT/BODBER/RYBY/PROUD/PROUD_SEQ

facets
enumeration 1
enumeration 2
enumeration 3
enumeration 4
enumeration 5

annotation
documentation
mesohabitat

simpleType **OBLACNOST_SMPL**

type restriction of **xsd:string**

used by
element **AGENDA/OBJEKT/BODBER/PROFIL_USEK/OBLACNOST_SEQ**

facets
enumeration 1
enumeration 2
enumeration 3
enumeration 4
enumeration 5

annotation
documentation
oblačnost

simpleType **ODB_BREH_SMPL**

type restriction of **xsd:string**

used by
element **AGENDA/OBJEKT/BODBER/ODB_BREH_SEQ**

facets
enumeration 1
enumeration 2

annotation
documentation
odběr - břeh

simpleType **ODB_FOTO_SMPL**

type restriction of **xsd:string**

used by
element **AGENDA/OBJEKT/BODBER/PROFIL_USEK/FOTO/ODB_FOTO_SEQ**

facets
enumeration 1
enumeration 2
enumeration 3

annotation
documentation
foto

simpleType **ODB_MERENI_SMPL**

type restriction of **xsd:string**

used by elements **AGENDA/OBJEKT/BODBER/PROFIL_USEK/SOUR_DK_GPS/SOUR_DK_GPS_POLOHA_SEQ**
AGENDA/OBJEKT/BODBER/PROFIL_USEK/SOUR_HK_GPS/SOUR_HK_GPS_POLOHA_SEQ

facets
enumeration 1
enumeration 2
enumeration 3

annotation
documentation
měřeno z

simpleType **ODB_ZPUSOB_SMPL**

type restriction of **xsd:string**

used by element **AGENDA/OBJEKT/BODBER/ODB_ZPUSOB_SEQ**

facets
enumeration 1
enumeration 2
enumeration 3

annotation
documentation
způsob odběru

simpleType **POCASI**

type restriction of **xsd:string**

used by element **AGENDA/OBJEKT/ODBER/POCASI**

facets
enumeration OK
enumeration OBLACNO
enumeration ZATAZENO
enumeration MLHA
enumeration MRHOLENI
enumeration DEST
enumeration DEST_SNIH
enumeration SNIH
enumeration PREHANKY
enumeration BOURKA

annotation
documentation
Číselník počasí

simpleType **POHLAVI**

type restriction of **xsd:string**

used by element **M_ODB_RYBA/RYBA/POHLAVI**

facets
enumeration M
enumeration F

annotation
documentation
Číselník pohlaví

simpleType **PROUD_SMPL**

type restriction of **xsd:string**

facets
enumeration 1
enumeration 2
enumeration 3

annotation
documentation
proud

simpleType **PROUDENI_SMPL**

type restriction of **xsd:string**

used by element **AGENDA/OBJEKT/BODBER/CHAR_USEK/TOK/PROUDENI_SEQ**

facets
enumeration 1
enumeration 2

enumeration 3
enumeration 4
annotation documentation
proud?ní

simpleType **PRUHLEDNOST_SMPL**

type restriction of **xsd:string**

used by element **AGENDA/OBJEKT/BODBER/PROFIL_USEK/PRUHLEDNOST_SEQ**

facets enumeration 1
enumeration 2
enumeration 3

annotation documentation
pr?hlednost

simpleType **S_CAS_ANALYZY**

type **xsd:string**

used by elements **M_VZOREK/CAS_ANALYZY** **M_VZOREK_PASIV_VZORKOVAC/CAS_ANALYZY** **M_VZOREK_VODA/CAS_ANALYZY** **M_VZOREK_DREISSENA/CAS_ANALYZY** **M_VZOREK_NAROSTY/CAS_ANALYZY** **M_VZOREK_PLAVENINY/CAS_ANALYZY** **M_VZOREK_SEDIMENTY/CAS_ANALYZY** **M_VZOREK_RYBA/CAS_ANALYZY** **M_VZOREK_RYBA_PLUDEK/CAS_ANALYZY** **M_VZOREK_BENTOS/CAS_ANALYZY**

annotation documentation
Datum a čas analýzý ve formátu DD.MM.YYYY HH24:MI

simpleType **S_LABORATOR**

type **xsd:string**

used by elements **M_VZOREK/LABORATOR** **M_VZOREK_PASIV_VZORKOVAC/LABORATOR** **M_VZOREK_VODA/LABORATOR** **M_VZOREK_DREISSENA/LABORATOR** **M_VZOREK_NAROSTY/LABORATOR** **M_VZOREK_PLAVENINY/LABORATOR** **M_VZOREK_SEDIMENTY/LABORATOR** **M_VZOREK_RYBA/LABORATOR** **M_VZOREK_RYBA_PLUDEK/LABORATOR** **M_VZOREK_BENTOS/LABORATOR**

annotation documentation
Laboratoř

simpleType **S_OBJEKT_ID**

type restriction of **xsd:string**

used by element **AGENDA/OBJEKT/OBJEKT_ID**

facets minLength 4
maxLength 30
whiteSpace collapse

annotation documentation
Identifikátor objektu / profilu sledování jakosti

simpleType **S_ODBER_ID**

type **xsd:string**

used by element **AGENDA/OBJEKT/ODBER/ODBER_ID**

annotation documentation
Identifikátor odběru

simpleType **S_VZOREK_ID**

type **xsd:string**

used by elements **M_VZOREK/VZOREK_ID** **M_VZOREK_PASIV_VZORKOVAC/VZOREK_ID** **M_VZOREK_VODA/VZOREK_ID** **M_VZOREK_DREISSENA/VZOREK_ID** **M_VZOREK_NAROSTY/VZOREK_ID** **M_VZOREK_PLAVENINY/VZOREK_ID** **M_VZOREK_SEDIMENTY/VZOREK_ID** **M_VZOREK_RYBA/VZOREK_ID** **M_VZOREK_RYBA_PLUDEK/VZOREK_ID** **M_VZOREK_BENTOS/VZOREK_ID**

annotation documentation
Identifikátor vzorku

simpleType **SMATR_SMPL**

type restriction of **xsd:string**

used by element **AGENDA/OBJEKT/BODBER/BVZOREK/SMATR_SEQ**

facets
enumeration FB
enumeration MF
enumeration FP
enumeration MB
enumeration RYBY

annotation documentation
Submatrice

simpleType **SRAZKY_SMPL**

type restriction of **xsd:string**

used by element **AGENDA/OBJEKT/BODBER/PROFIL_USEK/SRAZKY_SEQ**

facets
enumeration 1
enumeration 2
enumeration 3
enumeration 4
enumeration 5

annotation documentation
srážky

simpleType **STAV_SMPL**

type restriction of **xsd:string**

used by element **AGENDA/OBJEKT/BODBER/BVZOREK/STAV_SEQ**

facets
enumeration 1
enumeration 2
enumeration 3

annotation documentation
Stav vzorku

simpleType **SUBSTRAT_SMPL**

type restriction of **xsd:string**

used by element **AGENDA/OBJEKT/BODBER/CHAR_USEK/DNO/SUBSTRAT/SMPL_VAL**

facets
enumeration 1
enumeration 2
enumeration 3
enumeration 4
enumeration 5
enumeration 6
enumeration 7
enumeration 8
enumeration 9

annotation documentation
substrát

simpleType **TOK_HLOUBKA_SMPL**

type restriction of **xsd:string**

used by element **AGENDA/OBJEKT/BODBER/CHAR_USEK/TOK/HLOUBKA/SMPL_VAL**

facets
enumeration 1
enumeration 2
enumeration 3

annotation documentation
hloubka toku

simpleType **TOK_SIRKA_SMPL**

type restriction of **xsd:string**

used by element **AGENDA/OBJEKT/BODBER/CHAR_USEK/TOK/SIRKA/SMPL_VAL**

facets
enumeration 1
enumeration 2
enumeration 3

annotation
documentation
ší?ka toku

simpleType **TYP_TOXICITY**

type restriction of **xsd:string**

used by element **M_TOXICITA/TYP_TOXICITY**

facets
enumeration LC50
enumeration EC50
enumeration IC

annotation
documentation
Číselník ukazatelů toxicity

simpleType **VAL_NUM_POSITIVE**

type restriction of **xsd:float**

used by elements **AGENDA/OBJEKT/BODBER/VZORKOVNICE/OBJEM VAL_ITEM_NPOSITIVE/VAL**
AGENDA/OBJEKT/BODBER/CHAR_USEK/DNO/NANOSY/VAL_NUM
AGENDA/OBJEKT/BODBER/CHAR_USEK/TOK/HLOUBKA/VAL_NUM
AGENDA/OBJEKT/BODBER/CHAR_USEK/TOK/SIRKA/VAL_NUM
AGENDA/OBJEKT/BODBER/BVZOREK/BHODNOTA/HODNOTA/VAL_NUM
VAL_SMPL_PNUM/VAL_NUM

facets minInclusive 0

simpleType **VAL_PROC**

type restriction of **xsd:integer**

used by elements **AGENDA/OBJEKT/BODBER/CHAR_USEK/BAKTER_NAROSTY**
AGENDA/OBJEKT/BODBER/PROFIL_USEK/BRODITELNOST
AGENDA/OBJEKT/BODBER/PROFIL_USEK/PODIL_PEREJ
AGENDA/OBJEKT/BODBER/PROFIL_USEK/PODIL_TUN
VAL_ITEM_PROC/VAL
AGENDA/OBJEKT/BODBER/CHAR_USEK/BREH_UPRAVA/LB/
VAL_NUM
AGENDA/OBJEKT/BODBER/CHAR_USEK/BREH_UPRAVA/PB/
VAL_NUM
AGENDA/OBJEKT/BODBER/CHAR_USEK/DNO/UPRAVA/VAL_
NUM
AGENDA/OBJEKT/BODBER/CHAR_USEK/DNO/STABILITA/VA
L_NUM
AGENDA/OBJEKT/BODBER/CHAR_USEK/DNO/POKRYVNOST/
VAL_NUM
AGENDA/OBJEKT/BODBER/CHAR_USEK/DNO/SUBSTRAT/VA
L_NUM VAL_SMPL_PROC/VAL_NUM
AGENDA/OBJEKT/BODBER/PROFIL_USEK/ZASTINENI

facets minInclusive 0
maxInclusive 100

simpleType **VEGETACE_SMPL**

type restriction of **xsd:string**

used by elements **AGENDA/OBJEKT/BODBER/RYBY/VEGETACE/PLOV/VEGETACE_PLOV_SEQ**
AGENDA/OBJEKT/BODBER/RYBY/VEGETACE/POBR/VEGETACE_POBR_SE
Q
AGENDA/OBJEKT/BODBER/RYBY/VEGETACE/SUBM/VEGETACE_SUBM_SE
Q

facets enumeration 1

enumeration 2
enumeration 3
annotation documentation
vegetace

simpleType **VODNOST_SMPL**

type restriction of **xsd:string**

used by element **AGENDA/OBJEKT/BODBER/PROFIL_USEK/VODNOST_SEQ**

facets enumeration 1
enumeration 2
enumeration 3
enumeration 4
enumeration 5

annotation documentation
vodnost

simpleType **ZAHUSTENI_SMPL**

type restriction of **xsd:string**

used by element **AGENDA/OBJEKT/BODBER/BVZOREK/ZAHUSTENI_SEQ**

facets enumeration 1
enumeration 2
enumeration 3
enumeration 3

annotation documentation
Druh zahuštění vzorku

simpleType **ZAKAL_SMPL**

type restriction of **xsd:string**

used by element **AGENDA/OBJEKT/BODBER/PROFIL_USEK/ZAKAL_SEQ**

facets enumeration 1
enumeration 2
enumeration 3

annotation documentation
zákal

simpleType **ZAPACH_SMPL**

type restriction of **xsd:string**

used by element **AGENDA/OBJEKT/BODBER/PROFIL_USEK/ZAPACH/ZAPACH_SEQ**

facets enumeration 1
enumeration 2
enumeration 3
enumeration 4
enumeration 5

annotation documentation
pach